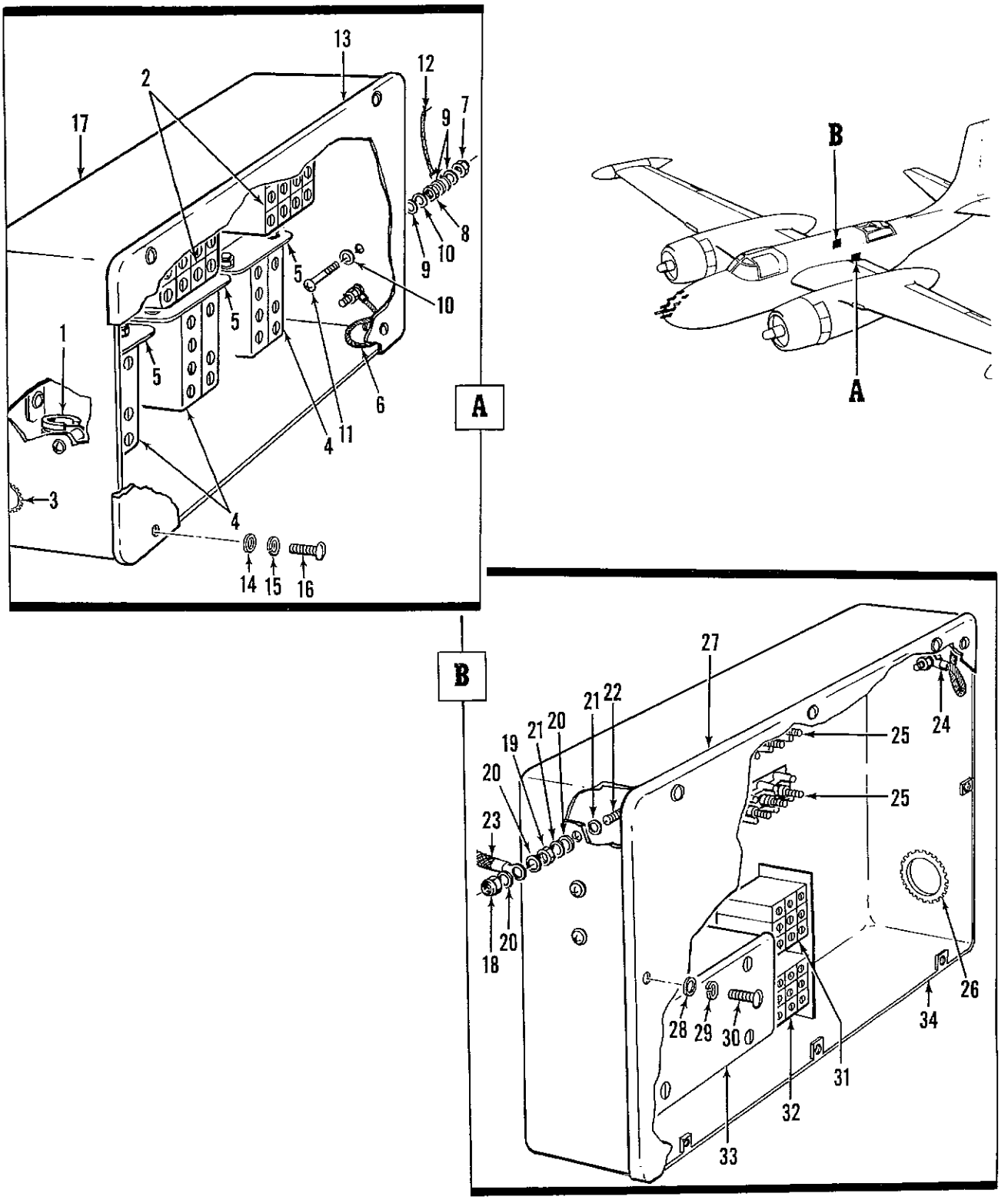

Figure 48. Jettison Relay and MM2 Junction Box Assemblies

FIG. AND INDEX NO.	PART NUMBER	DESCRIPTION 1 2 3 4 5 6 7	UNITS PER ASSY	USABLE ON CODE
48-		JETTISON RELAY AND MM2 JUNCTION BOX ASSEMBLIES		
	26-2629-400	. JUNCTION BOX ASSY, Jettison relay, sta 240 (for NHA see fig. 40). .	REF	
-1	MS21919DG12	. . CLAMP	1	
		(ATTACHING PARTS)		
	MS20365-1032	. . NUT	1	
	AN960-10L	. . WASHER	3	
	LS607-16	. . SPACER, Sleeve (03033)	1	
	AN526-1032R16	. . SCREW	1	
		----*----		
-2	MS25024-2	. . RELAY	2	
		(ATTACHING PARTS)		
	AN526-832R8	. . SCREW	8	
	AN960-8L	. . WASHER	8	
		----*----		
-3	G51HA	. . GROMMET (03296)	1	
-4	AN3314-1	. . RELAY	3	
		(ATTACHING PARTS)		
	MS20365-832	. . NUT	6	
	AN960-8L	. . WASHER	12	
	AN526-832R8	. . SCREW	6	
		----*----		
-5	26-2619-1	. . BRACKET, Relay support	3	
		(ATTACHING PARTS)		
	AN526-832R8	. . SCREW	6	
	AN960-8L	. . WASHER	6	
		----*----		
-6	26-2651-1	. . CORD ASSY, Junction box	1	
		(ATTACHING PARTS)		
	MS20365-832	. . NUT	2	
	AN960-8L	. . WASHER	6	
	AN526-832R8	. . SCREW	2	
		----*----		
	2607-500	. . STUD ASSY, Ground	1	
-7	MS20365-1032C	. . . NUT	1	
-8	MS20341-10	. . . NUT	1	
-9	AN960-10	. . . WASHER	3	
-10	AN936A10	. . . WASHER	2	
-11	AN526-1032R16	. . . SCREW	1	
-12	26-2645-1	. . CABLE ASSY, Bond strap	1	
	26-2629-3	. . COVER ASSY, Junction box	1	
-13	MT2023-500-010	. . . COVER (76561)	1	
-14	AN960D8	. . . WASHER	4	
-15	AN935-8	. . . WASHER	4	
-16	1-170-2	. . . SCREW (76561)	4	
-17	26-2629-1	. . ENCLOSURE ASSY (Riveted)	1	
	26-2637-400	. JUNCTION BOX ASSY, MM2, sta 223.5 (for NHA see fig. 40)	REF	
	2607-500	. . STUD ASSY, Ground	5	
-18	MS20365-1032C	. . . NUT	1	
-19	MS20341-10	. . . NUT	1	
-20	AN960-10	. . . WASHER	3	
-21	AN936A10B	. . . WASHER	2	
-22	AN526-1032R16	. . . SCREW	1	
-23	26-2645-1	. . CABLE ASSY, Bond strap	1	
-24	26-2651-1	. . CORD ASSY, Junction box	1	
-25	MS25123-1-15	. . TERMINAL BOARD	2	
		(ATTACHING PARTS)		
	AN515-6R12	. . SCREW	6	
	LS607-16	. . SPACER, Sleeve (03033)	6	
		----*----		
-26	G51HA	. . GROMMET (03296)	1	
	26-2637-5	. . COVER ASSY, Junction box	1	
-27	MT3601-063-008	. . . COVER (76561)	1	
-28	AN960D8	. . . WASHER	6	
-29	AN935-8	. . . WASHER	6	
-30	1-170-2	. . . SCREW (76561)	6	
-31	9272-3318	. . RELAY, Armature (35344)	1	

FIG. AND INDEX NO.	PART NUMBER	DESCRIPTION 1 2 3 4 5 6 7	UNITS PER ASSY	USABLE ON CODE
48-32	MS24149D1	. . RELAY	1	
		(ATTACHING PARTS)		
	AN515-8R8	. . SCREW	4	
	AN960-8	. . WASHER	4	
		----*----		
-33	1PA1000	. . ADAPTER, Type 1, phase (63510)	1	
		(ATTACHING PARTS)		
	AN515-10R8	. . SCREW	4	
	AN960-10	. . WASHER	4	
		----*----		
-34	26-2637-1	. . BOX, Junction (riveted)	1	

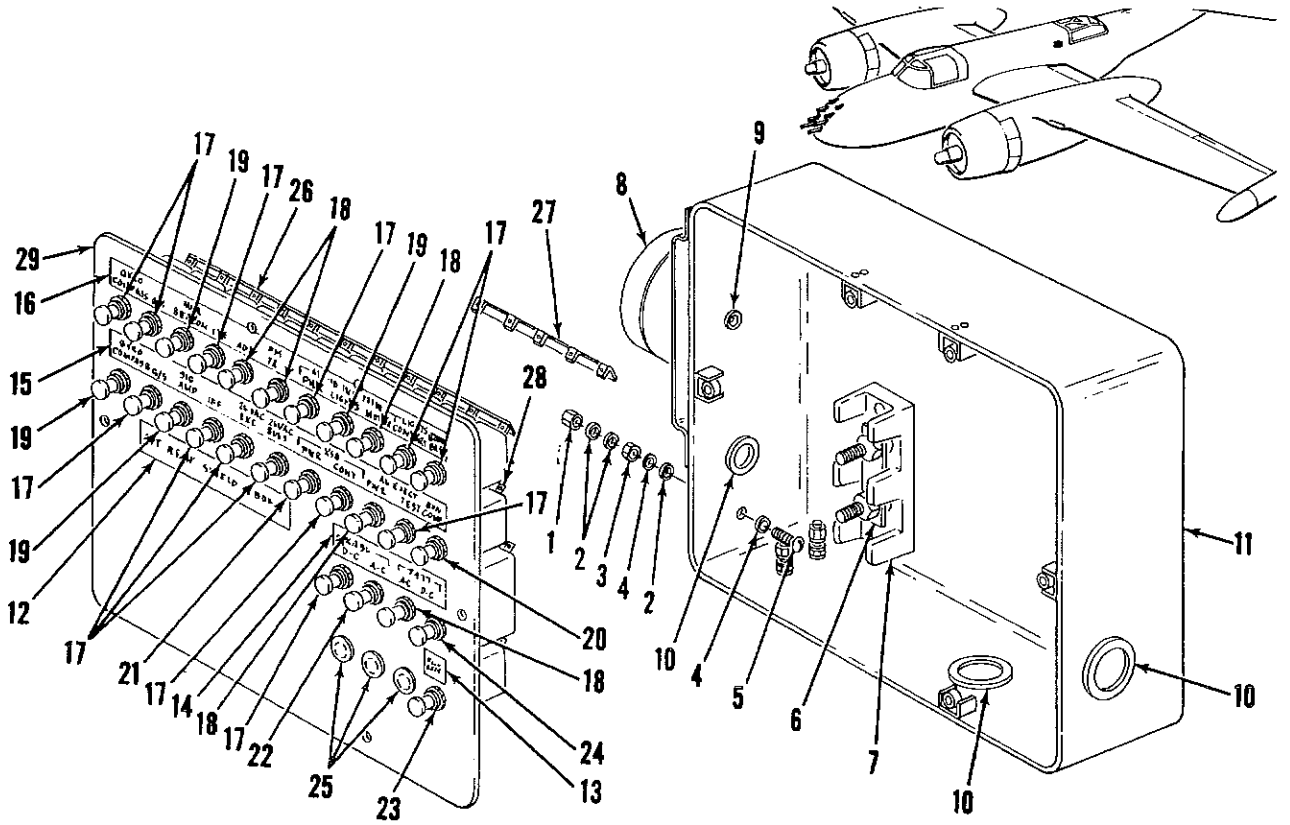

Figure 49. Aft Relay Shield, Sta. 285 Junction Box Assembly

FIG. AND INDEX NO.	PART NUMBER	DESCRIPTION 1 2 3 4 5 6 7	UNITS PER ASSY	USABLE ON CODE
49-	26-2646-1	JUNCTION BOX ASSEMBLY, Aft relay shield, sta 285 . . . . . . (for NHA see fig. 40)	REF	
	2607-500	. STUD INSTL GROUND	3	
-1	MS20365-1032C	. . NUT	1	
-2	AN960-10	. . WASHER	3	
-3	MS20341-10	. . NUT	1	
-4	AN936A10	. . WASHER	2	
-5	AN526-1032R16	. . SCREW	1	
-6	MS25226-8-2	. BUS, Terminal board	2	
		(ATTACHING PARTS)		
	AN345-516	. NUT	2	
	AN960-516	. WASHER	2	
		----*----		
-7	MS25123-4-2	. TERMINAL BOARD	1	
		(ATTACHING PARTS)		
	AN340-6	. NUT	2	
	AN960-6	. WASHER	2	
	AN515-6R6	. SCREW	2	
		----*----		
-8	5939GLM	. BELL, Alarm (19557)	1	
		(ATTACHING PARTS)		
	AN530-8-8	. SCREW	3	
		----*----		
-9	AN931-3-5	. GROMMET	1	
-10	G51H-A	. GROMMET	AR	
-11	26-2646-1	. JUNCTION BOX, (Altered from 5195572 (18355))	1	
	26-2631-1	. SHIELD COVER ASSY, Aft relay sta 285	1	

FIG. AND INDEX NO.	PART NUMBER	DESCRIPTION 1 2 3 4 5 6 7	UNITS PER ASSY	USABLE ON CODE
49-		(ATTACHING PARTS)		
	AN960-8	. WASHER	6	
	AN526-832R9	. SCREW	6	
		----*----		
-12	B26-056-011	. . DECAL (06327)	1	
-13	B26-056-014	. . DECAL (06327)	1	
-14	B26-056-015	. . DECAL (06327)	1	
-15	B26-056-013	. . DECAL (06327)	1	
-16	B26-056-012	. . DECAL (06327)	1	
-17	MS25244-5	. . CIRCUIT BREAKER	13	
-18	MS25244-10	. . CIRCUIT BREAKER	5	
-19	MS25244-2	. . CIRCUIT BREAKER	4	
-20	MS25244-35	. . CIRCUIT BREAKER	1	
-21	MS25244-25	. . CIRCUIT BREAKER	1	
-22	MS25244-3	. . CIRCUIT BREAKER	1	
-23	MS25244-7	. . CIRCUIT BREAKER	1	
-24	D6753-1	. . CIRCUIT BREAKER (82647)	1	
		(ATTACHING PARTS)		
	AN515-6R6	. . SCREW	2	
	AN960-6	. . WASHER	2	
		----*----		
-25	BS51117	. . PLUG, Panel (00194)	3	
-26	3V7-10-28-11	. . BUS BAR (91812)	1	
-27	3V7-10-28-6	. . BUS BAR (91812)	1	
-28	3V7-10-28-4	. . BUS BAR (91812)	1	
-29	26-2631-3	. . COVER	1	

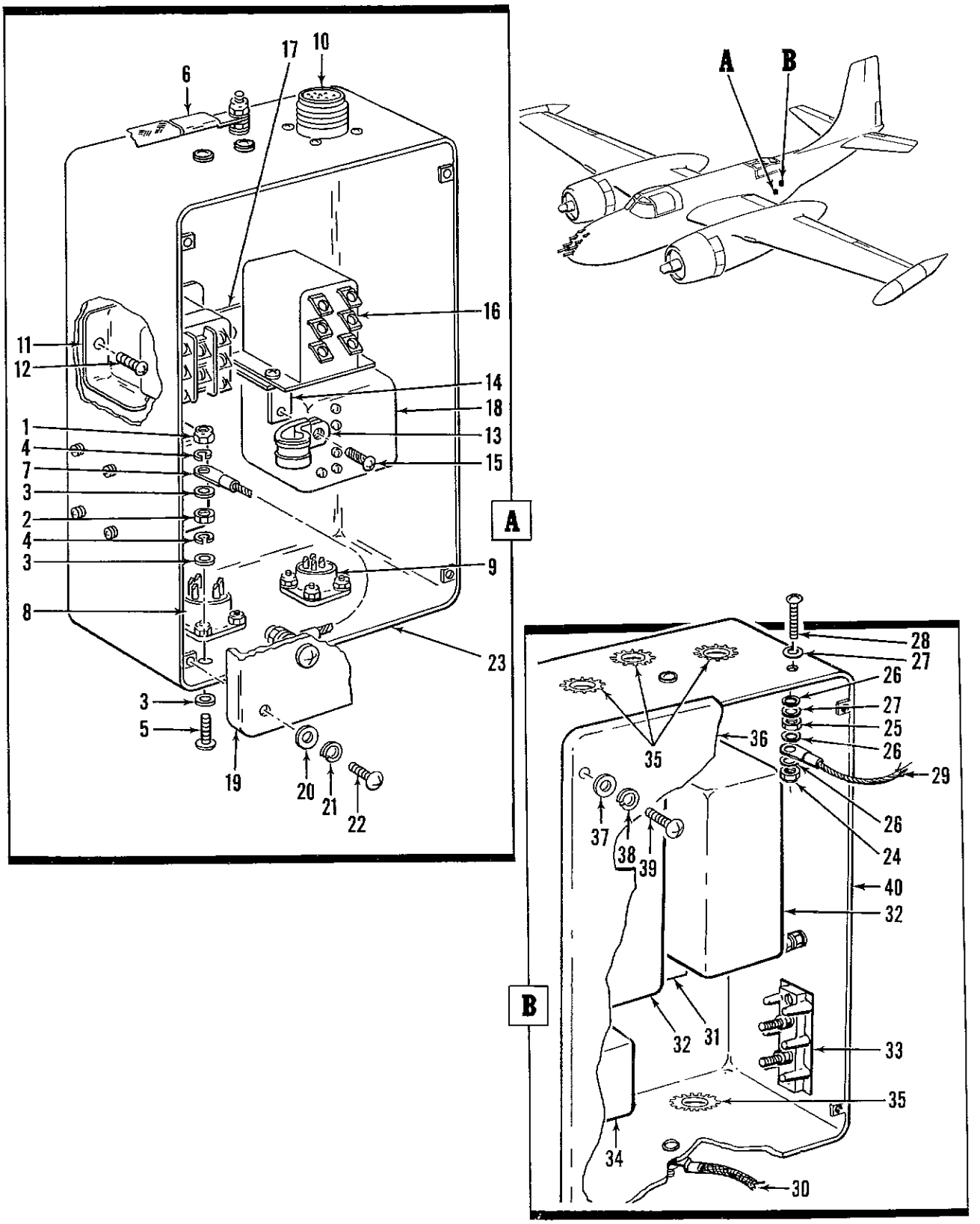

Figure 50. P2 Strike Camera and Inverter Junction Box Assemblies

FIG. AND INDEX NO.	PART NUMBER	DESCRIPTION 1 2 3 4 5 6 7	UNITS PER ASSY	USABLE ON CODE
50-		P2 STRIKE CAMERA AND INVERTER JUNCTION BOX ASSEMBLIES		
	26-2715-1	. JUNCTION BOX ASSY, P2 strike camera, sta 296 (for NHA see fig. 40)	REF	
	2607-500	. . STUD INSTL, Ground	5	
-1	MS20365-1032C	. . . NUT	1	
-2	MS20341-10	. . . NUT	1	
-3	AN960-10	. . . WASHER	3	
-4	AN936A10	. . . WASHER	2	
-5	AN526-1032R16	. . . SCREW	1	
-6	26-2645-1	. . . CABLE ASSY, Bond strap	1	
-7	26-2651-1	. . . CORD ASSY, Junction box	1	
-8	MS3102A18-8S	. . CONNECTOR	1	
-9	MS3102A14S2S	. . CONNECTOR	1	
-10	MS3102A18-1P	. . CONNECTOR	1	
		(ATTACHING PARTS)		
	MS20365-440A	. . NUT	4	
	AN960-4L	. . WASHER	4	
	AN515-4R6	. . SCREW	4	
		----*----		
-11	MS24149D1	. . RELAY	1	
		(ATTACHING PARTS)		
-12	AN515-8R8	. . SCREW	2	
		----*----		
-13	MS21919D4	. . CLAMP	1	
		(ATTACHING PARTS)		
	AN530B8-8	. . SCREW	1	
	AN960-8	. . WASHER	1	
		----*----		
-14	A6236-8Z3	. . BRACKET (78553)	1	
		(ATTACHING PARTS)		
-15	AN530B8-8	. . SCREW	1	
		----*----		
-16	AN3314-1	. . RELAY	1	
		(ATTACHING PARTS)		
	MS20365-832A	. . NUT	1	
	AN960-8	. . WASHER	2	
	AN515-8R8	. . SCREW	1	
		----*----		
-17	26-2619-1	. . BRACKET, Relay support	1	
		(ATTACHING PARTS)		
	AN515-8R8	. . SCREW	2	
		----*----		
-18	36548	. . RELAY, Time delay, type B9A (73949)	2	
		(ATTACHING PARTS)		
	AN960-6	. . WASHER	8	
	AN936A6	. . WASHER	8	
	AN515-6R6	. . SCREW	8	
		----*----		
	26-2715-5	. . COVER ASSY, Junction box	1	
-19	MT2023-050-008	. . . COVER (76561)	1	
-20	AN960D8	. . . WASHER	4	
-21	AN935-8	. . . WASHER	4	
-22	1-170-2	. . . SCREW (76561)	4	
-23	26-2715-3	. . JUNCTION BOX	1	
	26-2654-400	. JUNCTION BOX ASSY, Inverter, sta 296 (for NHA see fig. 40)	REF	
	2607-500	. . STUD INSTL, Ground	5	
-24	MS20365-1032C	. . . NUT	1	
-25	MS20341-10	. . . NUT	1	

FIG. AND INDEX NO.	PART NUMBER	DESCRIPTION 1 2 3 4 5 6 7	UNITS PER ASSY	USABLE ON CODE
50-26	AN960-10	. . . . WASHER	3	
-27	AN960A10	. . . . WASHER	2	
-28	AN526-1032R16	. . . . SCREW	1	
-29	26-2651-1	. . CORD ASSY, Junction box	1	
-30	26-2645-1	. . CABLE ASSY, Bond strap	1	
-31	26-2654-1	. . BUS BAR	1	
		(ATTACHING PARTS)		
	AN515-8R8	. . SCREW	2	
		----*----		
-32	7236-1-150	. . CONTROL, Overload sensing (35344)	2	
		(ATTACHING PARTS)		
	AN515-8R8	. . SCREW	2	
		----*----		
-33	MS25123-1-2	. . TERMINAL BOARD	1	
		(ATTACHING PARTS)		
	AN515-6R8	. . SCREW	2	
		----*----		
-34	9272-3318	. . RELAY, Armature (35344)	1	
		(ATTACHING PARTS)		
	AN515-8R8	. . SCREW	2	
		----*----		
-35	G51H-A	. . GROMMET (03296)	4	
	26-2654-5	. . COVER ASSY, Junction box	1	
-36	MT2023-050-250	. . . . COVER (76561)	1	
-37	AN960D8	. . . . WASHER	4	
-38	AN935-8	. . . . WASHER	4	
-39	1-170-2	. . . . SCREW (76561)	4	
-40	26-2654-7	. . JUNCTION BOX (Riveted)	1	

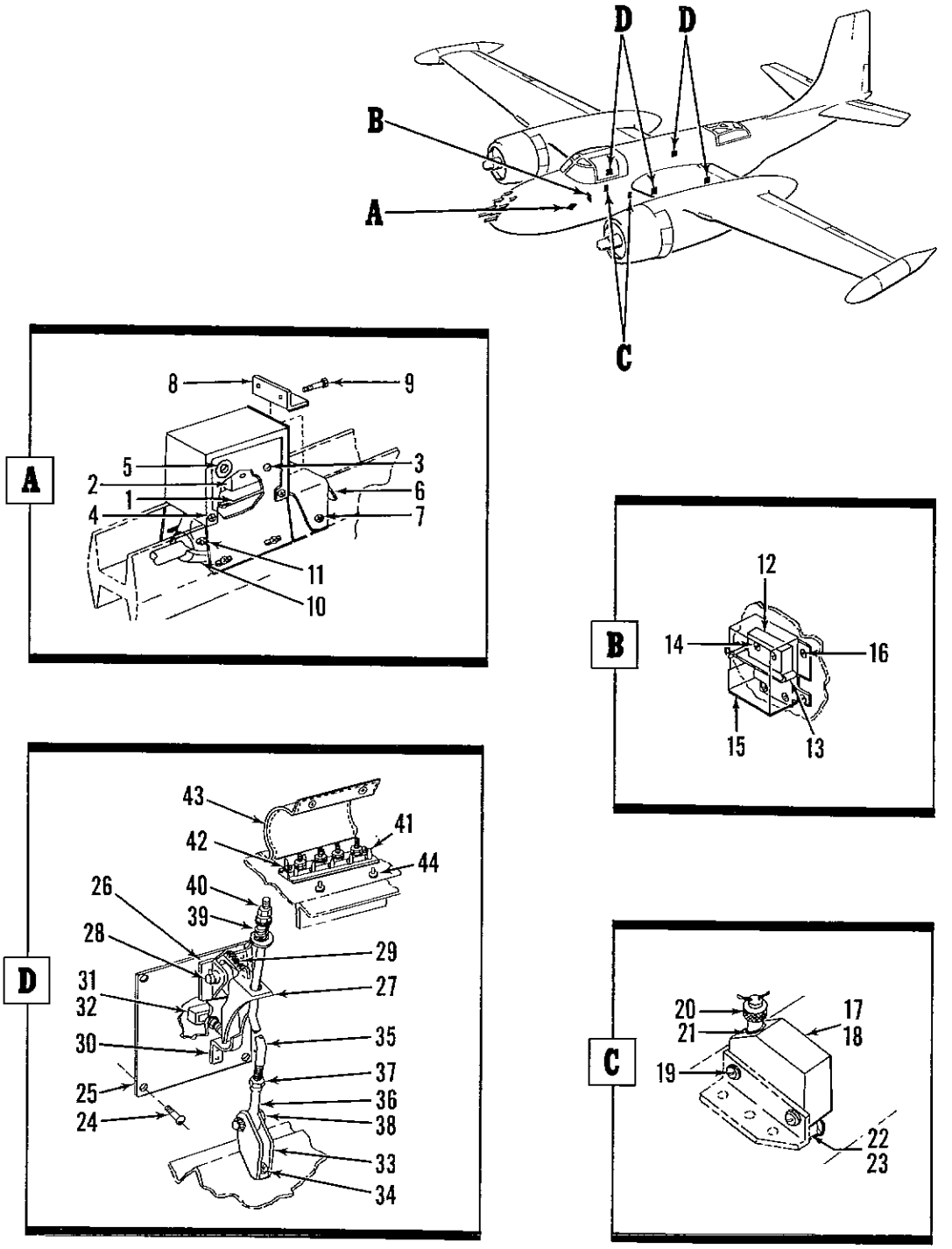

Figure 51. Nose Wheel Latch Down, Bomb Bay Door Closed, and Bomb Door Safety Switch Installations

FIG. AND INDEX NO.	PART NUMBER	DESCRIPTION 1 2 3 4 5 6 7	UNITS PER ASSY	USABLE ON CODE
51-		NOSE WHEEL LATCH DOWN, BOMB BAY DOOR CLOSED, AND BOMB DOOR SAFETY SWITCH INSTALLATIONS	REF	
	5206709	. SWITCH INSTL, Nose wheel latch down (18355) (for NHA see fig. 39)	REF	
	4206708	. . SUPPORT ASSY, Nose wheel latch down switch (18355)	1	
-1	9-10831	. . . ACTUATOR (91929)	1	
-2	MS25026-1	. . . SWITCH	1	
		(ATTACHING PARTS)		
	MS20365-632	. . . NUT	2	
	AN960D6	. . . WASHER	4	
	2033900-5D049-016	. . . SPACER, Sleeve (18355)	4	
-3	AN515-6-40	. . . SCREW	2	
		----*----		
	A880-6Z1	. . . NUT, Self-locking, hexagon (78553)	4	
-4	AN530-6R6	. . . SCREW	4	
-5	MS35489-4-7	. . . GROMMET	1	
-6	NO NUMBER	. . GUARD, Nose gear retracting link mud (per T.O. 1B-26-95)	1	
		(ATTACHING PARTS)		
-7	AN515-8R5	. . SCREW	6	
		----*----		
-8	NO NUMBER	. . ANGLE, Mud guard support (per T.O. 1B-26-95)	1	
		(ATTACHING PARTS)		
	MS20365-632	. . NUT	2	
-9	AN515-6-8	. . SCREW	2	
		----*----		
-10	1151337	. . ACTUATOR, Nose wheel down latch switch (18355)	1	
-11	AN515-6R8	. . SCREW	1	
	AN935-6	. . WASHER	1	
	5206024	. SWITCH INSTL, Nose gear latched up (18355)(for NHA see fig. 39)	REF	
-12	MS25026-1	. . SWITCH	1	
-13	9-10831	. . ACTUATOR (91929)	1	
		(ATTACHING PARTS)		
	MS20365-632	. . NUT	2	
	2033900-5D049-018	. . SPACER, Sleeve (18355)	2	
	AN960-6	. . WASHER	2	
	2208541	. . SPACER, Sleeve (18355)	2	
-14	AN515-6-28	. . SCREW	2	
		----*----		
-15	2206030	. . COVER, Nose gear latched up switch (18355)	1	
		(ATTACHING PARTS)		
	A1778-8Z1	. . NUT, Self-locking, hexagon (78533)	4	
	AN960-8	. . WASHER	4	
-16	AN530-8R8	. . SCREW	4	
		----*----		
	3207804	. SWITCH INSTL, Bomb bay door closed (18355) (for NHA see fig. 39)	REF	
-17	MS25026-1	. . SWITCH	1	
-18	PSH3206L	. . HOUSING (77221)	1	
	PSH3206R	. . HOUSING (77221)	1	
		(ATTACHING PARTS)		
-19	AN515-8R8	. . SCREW	4	
	AN960D8	. . WASHER	4	
	AN935-8L	. . WASHER	4	
		----*----		
-20	AN3054-6	. . NUT	2	
-21	MS35489-3-9	. . GROMMET	2	
-22	1023500	. . STUD (18355)	2	
-23	AN315-3R	. . NUT	2	
	5207691	. SWITCH INSTL, Bomb door safety (18355) (for NHA see figs. 39 and 40)	REF	A
	5205069	. SWITCH INSTL, Bomb door safety (18355) (for NHA see figs. 39 and 40)	REF	B
	4207845	. . BASE ASSY, Bomb door safety switch actuating LH (18355)	1	A
	4207845-1	. . BASE ASSY, Bomb door safety switch actuating RH (18355)	1	A
	4205082	. . BASE ASSY, Bomb door safety switch actuating LH (18355)	1	B
	4205847	. . BASE ASSY, Bomb door safety switch actuating RH (18355)	1	B

FIG. AND INDEX NO.	PART NUMBER	DESCRIPTION 1 2 3 4 5 6 7	UNITS PER ASSY	USABLE ON CODE
51-		(ATTACHING PARTS)		
-24	AN520-10-7	. . SCREW	8	
		----*----		
-25	2205080	. . . BASE, Bomb door safety switch actuating LH (18355)	1	
	2205846	. . . BASE, Bomb door safety switch actuating RH (18355)	1	
-26	4205081	. . . HINGE, Bomb door safety switch actuating (18355)	1	
-27	4205083	. . . PAWL, Bomb door safety switch actuating (18355)	1	
-28	MS20392-2C37	. . . PIN	1	
	AN960-10	. . . WASHER	2	
-29	1205147	. . . SPRING, Pawl retaining (18355)	1	
-30	1205077	. . . CLIP, Bomb door safety switch pawl retaining (18355)	1	
-31	BZ2RQ1A2	. . SWITCH, Micro (91929)	2	
-32	29-761	. . RING, Locking (88140)	2	
-33	2126740	. . BRACKET, Bomb rack control lock door actuating (18355)	2	
		(ATTACHING PARTS)		
-34	AN520-10-10	. . SCREW	4	
	AN960D10	. . WASHER	4	
		----*----		
	2207843	. . ROD ASSY, Bomb door safety LH or RH (18355)	2	A
	2205079	. . ROD ASSY, Bomb door safety switch actuating LH (18355)	1	B
	2205864	. . ROD ASSY, Bomb door safety RH (18355)	1	B
-35	2207842	. . . ROD, Bomb door safety switch actuating LH or RH (18355)	1	A
	2205078	. . . ROD, Bomb bay door safety switch actuating LH (18355)	1	B
	2205863	. . . ROD, Bomb bay door safety switch actuating RH (18355)	1	B
-36	REB3N	. . . END, Rod (86174)	1	
-37	AN316-4R	. . NUT	2	
	AN310-3	. . NUT	2	
-38	AN3-12	. . BOLT	2	
-39	119030	. . SPRING, Floor attaching dog (18355)	2	
-40	AN315-4R	. . NUT	4	
-41	NAS191-4	. . STRIP ASSY	2	
		(ATTACHING PARTS)		
-42	AN530-4-6	. . SCREW	4	
		----*----		
-43	2205141	. . COVER ASSY, Bomb release terminal strip (18355)	2	
-44	AN227-5B	. . FASTENER	4	
		A - USAF 17640 thru 17647, 17650 thru 17652, 17655, 17656, 17658, 17760 thru 17762, 17665 thru 17673, 17675, 17677 thru 17679		
		B - USAF 17648, 17649, 17653, 17654, 17657, 17659, 17663, 17664, 17674, 17676		

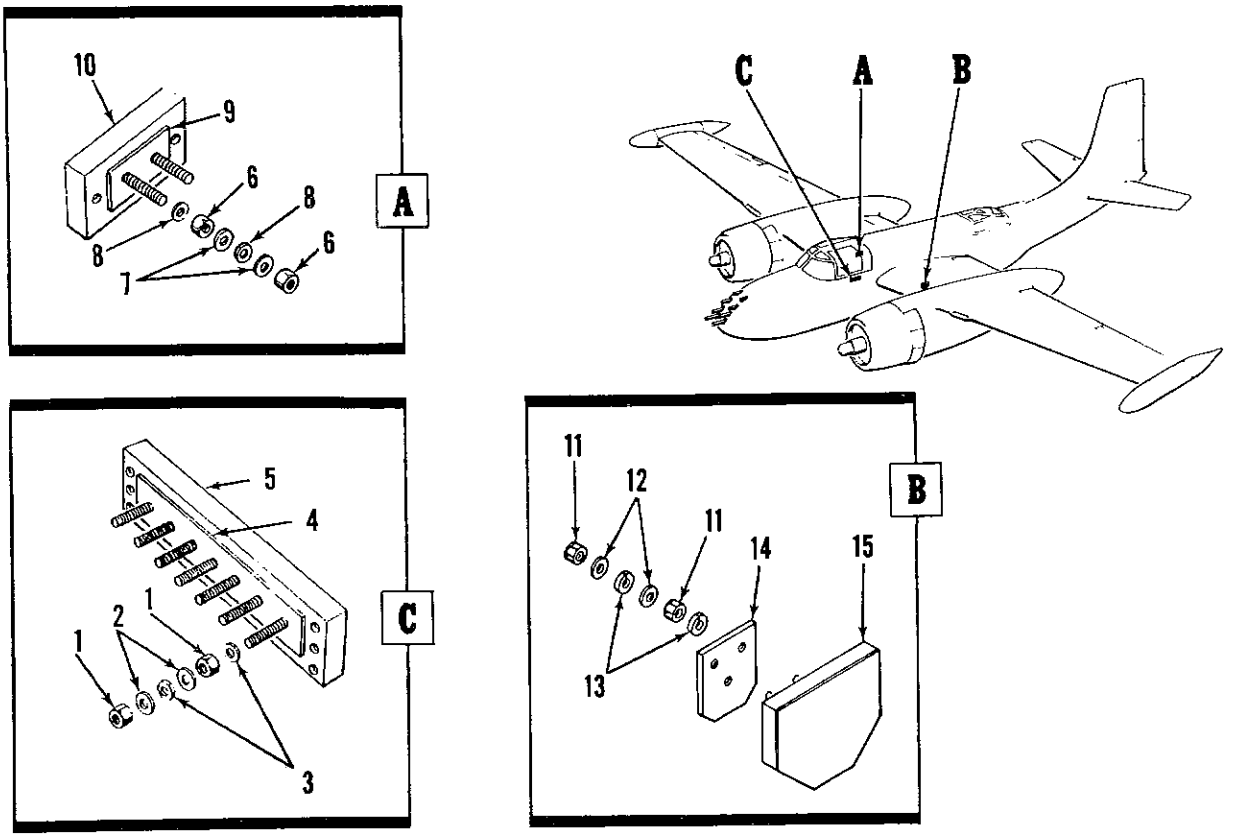

Figure 52. Bus Terminal Assemblies

FIG. AND INDEX NO.	PART NUMBER	DESCRIPTION 1 2 3 4 5 6 7	UNITS PER ASSY	USABLE ON CODE
52-		BUS TERMINAL ASSEMBLIES		
	26-2634-1	. TERMINAL ASSY, Bus, LH, sta 80 (for NHA see fig. 39)	REF	
-1	MS35690-611	. . NUT	14	
-2	AN960B616	. . WASHER	14	
-3	AN935B616	. . WASHER	14	
-4	26-2634-5	. . BUS BAR	1	
-5	26-2634-3	. . BLOCK ASSY	1	
	26-2635-1	. TERMINAL ASSY, Bus, RH, sta 110 (for NHA see fig. 39)	REF	
-6	MS35690-611	. . NUT	4	
-7	AN960B616	. . WASHER	4	
-8	AN935B616	. . WASHER	4	
-9	26-2635-5	. . BUS BAR	1	
-10	26-2635-3	. . BLOCK ASSY, Bus	1	
	26-2735-1	. TERMINAL ASSY, Bus, LH, sta 160 (for NHA see fig. 40)	REF	
-11	MS35690-611	. . NUT	6	
-12	AN960B616	. . WASHER	6	
-13	AN935B616	. . WASHER	6	
-14	26-2735-5	. . BUS BAR	1	
-15	26-2735-3	. . BLOCK ASSY, Bus	1	

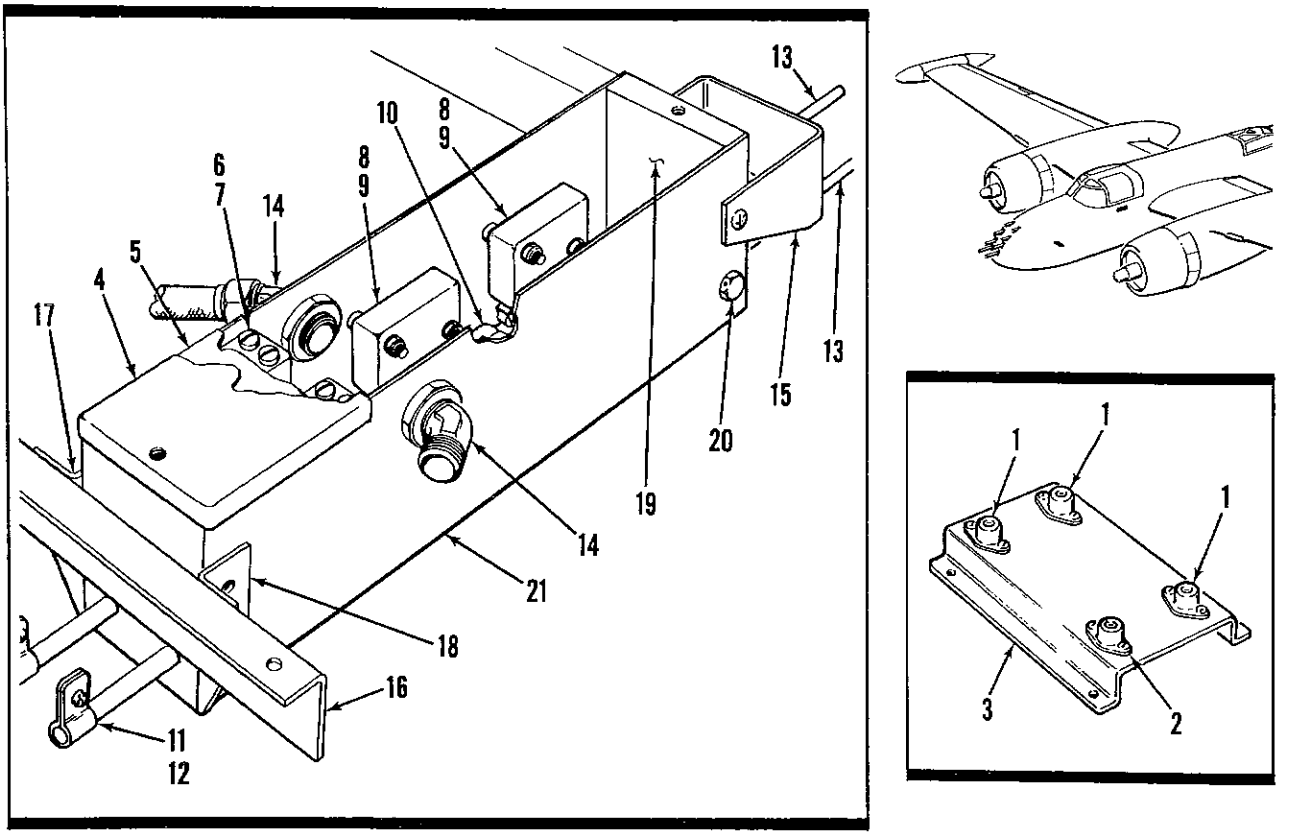

Figure 53. Hytrol Control Unit Mounting Bracket and Propeller Reverse Throttle Control Box Assemblies

FIG. AND INDEX NO.	PART NUMBER	DESCRIPTION 1 2 3 4 5 6 7	UNITS PER ASSY	USABLE ON CODE
53-		HYTROL CONTROL UNIT MOUNTING BRACKET AND PROPELLER REVERSE THROTTLE CONTROL BOX ASSEMBLIES		
	26-2623-1	. BRACKET ASSY, Hytrol control unit mounting, sta 1 (for NHA see fig. 39)	REF	
-1	B22-BC2.0	. . SHOCK MOUNT (13636)	3	
-2	B22-BC1.0	. . SHOCK MOUNT (13636)	1	
		(ATTACHING PARTS)		
	MS20365-832	. . NUT	8	
	AN960-8L	. . WASHER	8	
	NAS220-8	. . SCREW	8	
		----*----		
-3	26-2623-3	. . BRACKET	1	
	26-2200	. CONTROL BOX ASSY, Propeller reverse throttle (sta 70) (for NHA see fig. 39)	REF	
-4	26-2500	. . COVER	1	
		(ATTACHING PARTS)		
	AN515-6R8	. . SCREW	2	
		----*----		
-5	26-2200-4	. . PAD (Micarta)	1	
-6	MS25383-1	. . SWITCH, Limit	2	
		(ATTACHING PARTS)		
	MS20365-632	. . NUT	4	
	AN960-6	. . WASHER	8	
	AN515-6-16	. . SCREW	4	
		----*----		
-7	9-10831	. . ACTUATOR (91929)	2	
-8	MS25253-1	. . SWITCH, Limit	4	

FIG. AND INDEX NO.	PART NUMBER	DESCRIPTION 1 2 3 4 5 6 7	UNITS PER ASSY	USABLE ON CODE
53-		(ATTACHING PARTS)		
	MS20365-540	. . NUT	8	
	AN960-5	. . WASHER	AR	
	26-2200-3	. . SPACER	AR	
	AN515-5-14	. . SCREW	8	
		----*----		
-9	JV20	. . ACTUATOR (91929)	4	
-10	26-2509	. . CAM	2	
-11	26-2507	. . CLAMP	2	
		(ATTACHING PARTS)		
	AN501-10-4	. . SCREW	2	
		----*----		
-12	26-2508	. . PLATE	2	
-13	26-2200-2	. . ROD, Throttle control	2	
-14	AN3060-4	. . ELBOW	2	
-15	26-2505	. . SUPPORT	1	
		(ATTACHING PARTS)		
	MS20365-1032	. . NUT	1	
	AN960-10	. . WASHER	1	
	AN509-10-42	. . SCREW	1	
		----*----		
-16	26-2506	. . SUPPORT	1	
		(ATTACHING PARTS)		
	MS20365-1032	. . NUT	2	
	AN960-10	. . WASHER	4	
	AN3-4A	. . BOLT	2	
		----*----		
-17	26-2503	. . BRACKET	1	
-18	26-2504	. . BRACKET	1	
		(ATTACHING PARTS)		
	MS20365-1032	. . NUT	2	
	AN960-10	. . WASHER	3	
	AN509-10-42	. . SCREW	1	
	AN3-25A	. . BOLT	1	
		----*----		
-19	26-2502	. . BLOCK	2	
		(ATTACHING PARTS)		
	MS20365-1032	. . NUT	1	
	AN960-10	. . WASHER	1	
-20	AN3-25A	. . BOLT	1	
		----*----		
-21	26-2501	. . BOX	1	

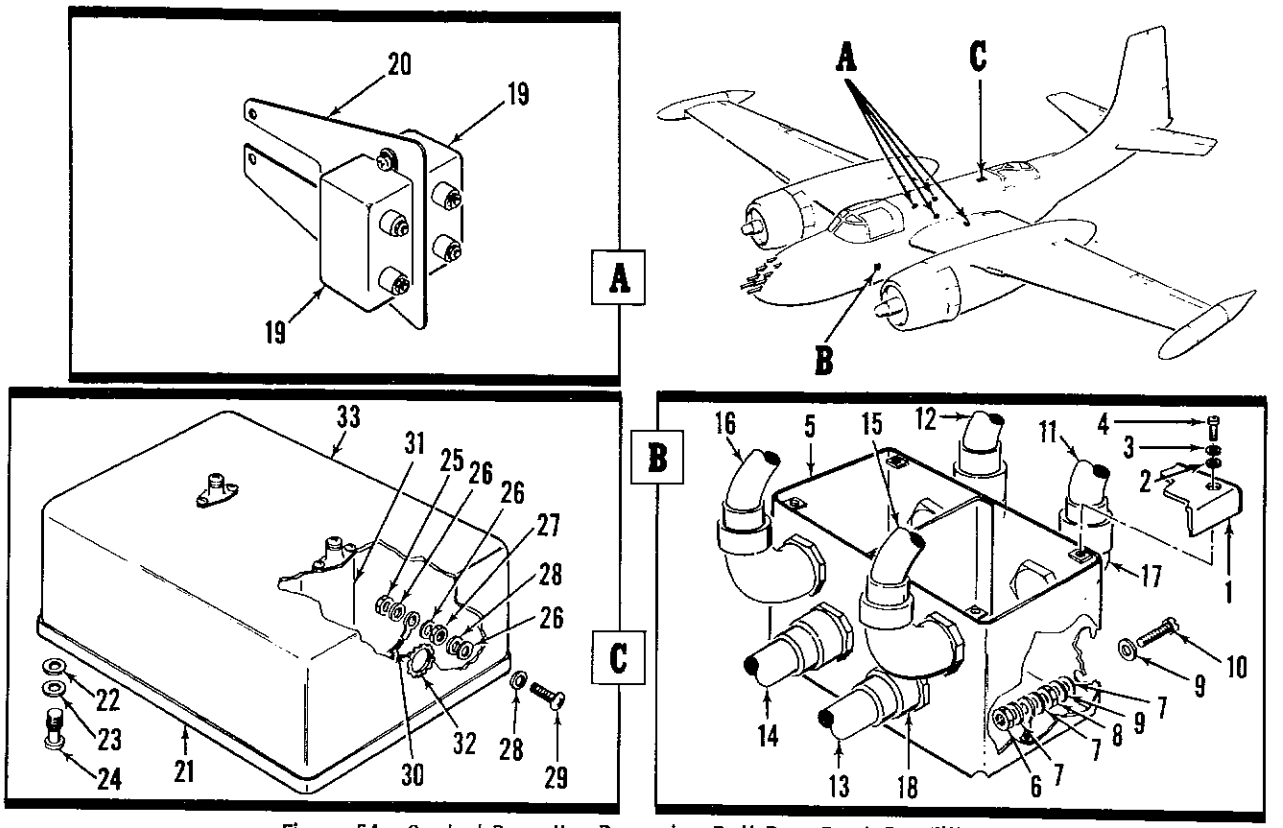

Figure 54. Control Propeller Reversing Pull Box, Bomb Bay Filter and F477 DC Power Sensor Box Assemblies

FIG. AND INDEX NO.	PART NUMBER	DESCRIPTION 1 2 3 4 5 6 7	UNITS PER ASSY	USABLE ON CODE
54-		CONTROL PROPELLER REVERSING PULL BOX, BOMB BAY FILTER AND F477 DC POWER SENSOR BOX ASSEMBLIES		
	26-2618-400	. BOX ASSY, Control propeller reversing pull (sta 77) (for NHA ref fig. 39)	REF	
	26-2618-1	. . BOX ASSEMBLY	1	
	MT51131-063-006	. . . COVER ASSY (76561)	1	
-1	MT5113-063-006	. . . . COVER (76561)	1	
-2	AN960D8	. . . . WASHER	4	
-3	AN935-8	. . . . WASHER	4	
-4	1-170-2	. . . . SCREW (76561)	4	
-5	MT11131-063-300	. . . BOX (76561)		
	2607-500	. . STUD INSTL, Ground	2	
-6	MS20365-1032C	. . . NUT	1	
-7	AN960-10	. . . WASHER	3	
-8	MS20341-10	. . . NUT	1	
-9	AN936A10	. . . WASHER	2	
-10	AN526-1032R16	. . . SCREW	1	
-11	26-2653-11	. . . CONDUIT ASSY, Breeze (to LH wing disconnect)	1	
-12	26-2653-12	. . . CONDUIT ASSY, Breeze (to RH wing disconnect)	1	
-13	26-2653-13	. . . CONDUIT ASSY, Breeze (to LH control box)	1	
-14	26-2653-14	. . . CONDUIT ASSY, Breeze (to RH control box)	1	
-15	26-2653-15	. . . CONDUIT ASSY, Breeze (to LH tunnel switch box)	1	
-16	26-2653-16	. . . CONDUIT ASSY, Breeze (to RH tunnel switch box)	1	
-17	AN3063-4	. . . ELBOW, Electrical conduit	4	
-18	AN3064-4	. . . BOX CONNECTOR, Electrical	2	
	AN3066-4	. . . NUT, Conduit coupling	6	
	26-2662-1	. FILTER ASSY, Bomb bay, sta 150 (for NHA see fig. 40)	REF	

FIG. AND INDEX NO.	PART NUMBER	DESCRIPTION 1 2 3 4 5 6 7	UNITS PER ASSY	USABLE ON CODE
54-19	1NA116	. . FILTER (71753)	2	
		(ATTACHING PARTS)		
	MS20365-832	. . NUT	2	
	AN960-8	. . WASHER	4	
	AN520-8R8	. . SCREW	2	
		----*----		
-20	26-2662-3	. . BRACKET	1	
	26-3602-1	. BOX ASSY, Sensor, F477 dc power, sta 218 (for NHA see fig. 40)	REF	
	26-3602-5	. . COVER ASSY	1	
-21	MT2436-063-300	. . . COVER (76561)	1	
-22	AN960D8	. . . WASHER	4	
-23	AN935-8	. . . WASHER	4	
-24	1-170-2	. . . SCREW (76561)	4	
	2607-500	. . STUD INSTL, Ground	2	
-25	MS20365-1032C	. . . NUT	1	
-26	AN960-10	. . . WASHER	3	
-27	MS20341-10	. . . NUT	1	
-28	AN936A10	. . . WASHER	2	
-29	AN526-1032R16	. . . SCREW	1	
-30	26-2651-1	. . CORD ASSY, Junction box	1	
-31	D7235-1-70	. . SENSING CONTROL, Overload (82647)	1	
		(ATTACHING PARTS)		
	AN960-10	. . WASHER	2	
	NAS221-9	. . SCREW	2	
		----*----		
-32	G51HA	. . GROMMET (03296)	AR	
-33	26-3602-3	. . BOX	1	

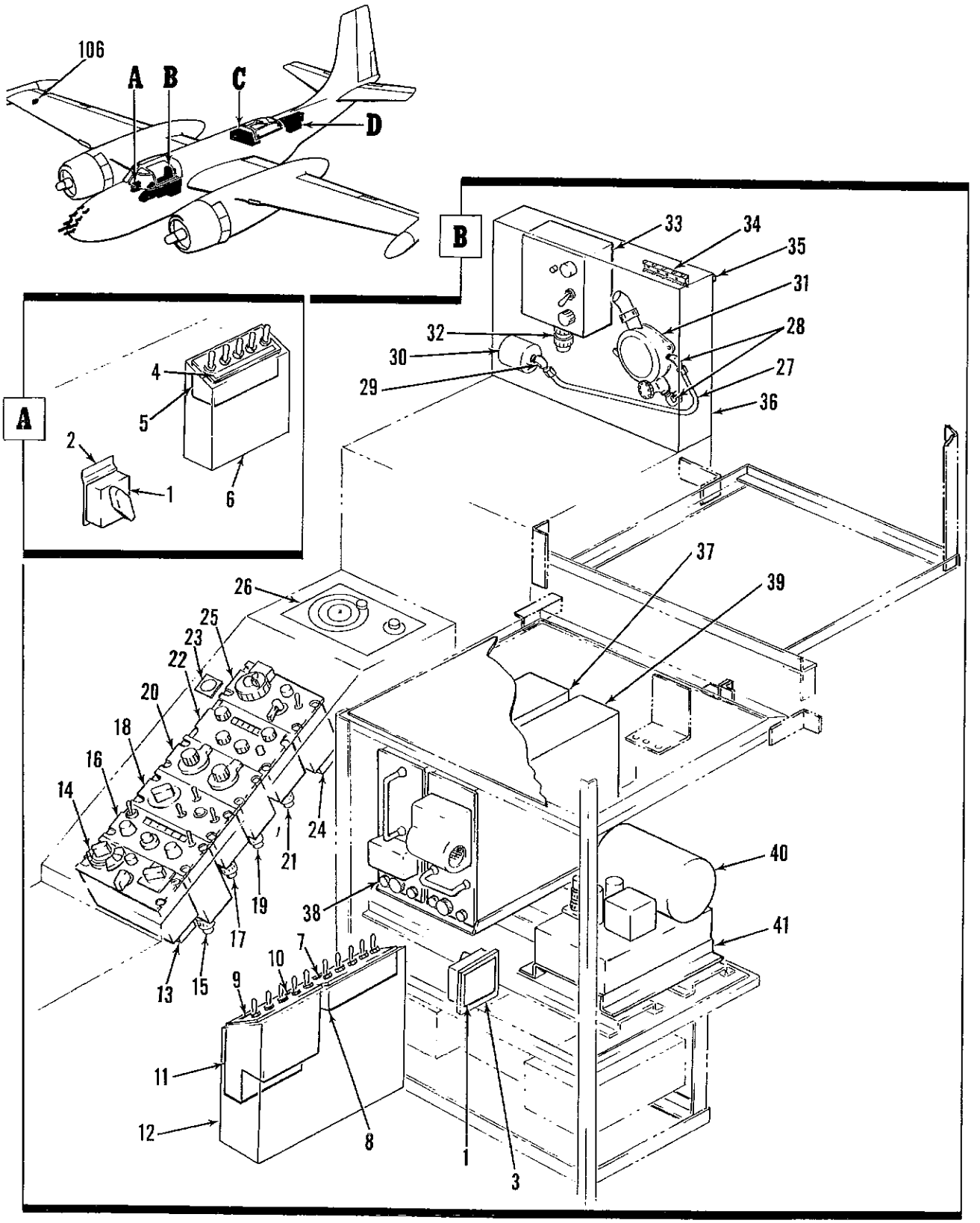

Figure 55. Communication and Navigation Installation (Sheet 1 of 2)

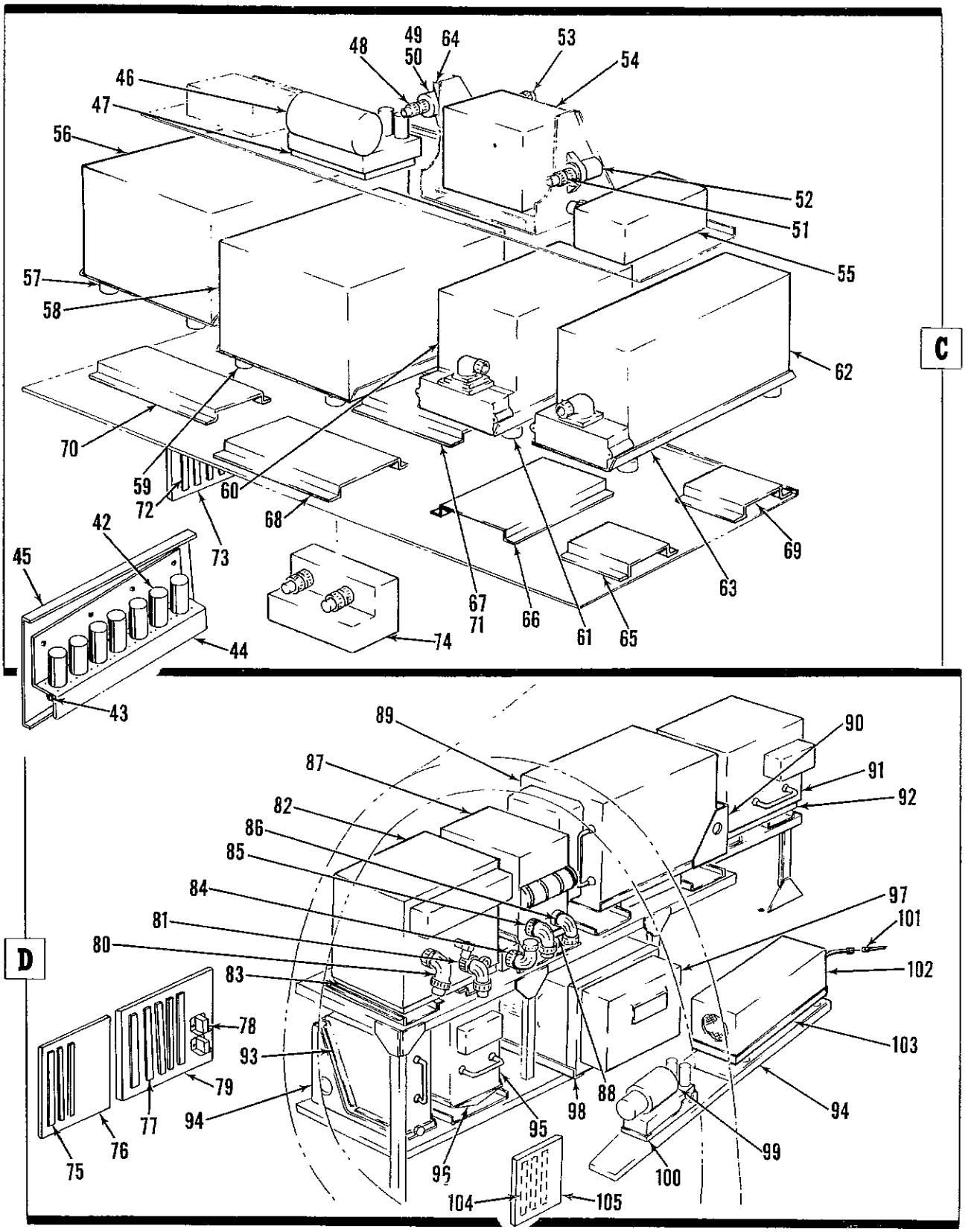

Figure 55. Communication and Navigation Installation (Sheet 2 of 2)

FIG. AND INDEX NO.	PART NUMBER	DESCRIPTION 1 2 3 4 5 6 7	UNITS PER ASSY	USABLE ON CODE
55-	26-4700-1	COMMUNICATION AND NAVIGATION INSTL (for NHA see fig. 4)	REF	
-1	FL30	. FILTER, Radio, JAN type FL30 (GFE)	2	
-2	26-4610-1	. BRACKET ASSY, Co-pilots range filter	1	
-3	26-4609-1	. BRACKET ASSY, Pilot range filter	1	
	26-4631-1	. AUDIO BOX INSTL, Co-pilots	NP	
-4	26-4614-5	. . NAMEPLATE	1	
-5	C826A/A1C10	. . CONTROL BOX, Intercommunication (GFE) (for details see T.O. 12R2-2A1C10-4)	1	
-6	26-4602-1	. . BRACKET ASSY, Co-pilots audio panel	1	
	26-4630-1	. AUDIO BOX INSTL	NP	
-7	26-4614-5	. . NAMEPLATE	1	
-8	C826A/A1C10	. . CONTROL BOX, Intercommunication (GFE) (for details see T.O. 12R2-2A1C10-4)	1	
-9	26-4614-3	. . NAMEPLATE	1	
-10	26-4614-1	. . NAMEPLATE	1	
-11	C824A/A1C10	. . CONTROL BOX, Intercommunication (GFE) (for details see T.O. 12R2-A1C10-4)	1	
-12	26-4601-1	. . PANEL ASSY, Pilots audio	1	
-13	XMER34SC2A406	. CONNECTOR, Plug, electrical (81312)	1	
-14	C1904/ARC27	. CONTROL RADIO SET, UHF communication (GFE) (furnished with mounting hardware) (for details see T.O. 12R2-2ARC27-4)	1	
-15	DD50SC13	. CONNECTOR, Plug electrical (71468)	1	
	DD20964	. SHIELD, Electrical connector (71468)	1	
-16	614U6	. CONTROL RADIO SET, VHF communication (GFE) (furnished with mounting hardware)	1	
-17	MS3106B20-27S	. CONNECTOR	1	
	MS3057-12	. ADAPTER	1	
-18	C1158/APX25	. CONTROL BOX, IFF (GFE) (Furnished with mounting hardware) (for details see T.O. 12P4-2APX25-133)	1	
-19	MS3106B20-27S	. CONNECTOR	1	
	MS3057-12	. ADAPTER	1	
-20	C1128/APX25	. CONTROL SET, SIF (GFE) (furnished with mounting hardware) (for details see T.O. 12P4-2APX25-133)	1	
-21	MS3106B28-15S	. CONNECTOR	1	
	MS3057-16	. ADAPTER	1	
-22	714E2	. CONTROL SET, High frequency communication (GFE) (furnished with mounting hardware)	1	
-23	1116-30	. INTERVALOMETER, Type 8-9A (GFE)	1	
-24	L208140-1	. CONNECTOR, Plug, electrical (12143)	1	
-25	SB327/ARC44	. CONTROL BOX, FM (GFE) (furnished with mounting hardware)	1	
-26	B-3A	. INTERVALOMETER (GFE)	1	
	26-4632-1	. BOX ASSY, Crew chief intercommunication	1	
-27	26-4632-5	. . TUBE ASSY	1	
	MS20819-4	. . . SLEEVE	2	
	AN818-4D	. . . NUT	2	
-28	MS20822-4D	. . ELBOW	1	
-29	AN911-4D	. . NIPPLE	1	
-30	AN6029-1	. . INDICATOR	1	
		(ATTACHING PARTS)		
	AN515-4-12	. . SCREWS	4	
		----*----		
-31	AF45-348574	. . REGULATOR (88537)	1	
-32	MS3106B20-27S	. . CONNECTOR	1	
	MS3057-2	. . ADAPTER	1	
-33	C824/A1C10	. . CONTROL BOX, Intercommunication (GFE) (for details see T.O. 12R2-A1C10-4)	1	
-34	MS25123-1-6	. . TERMINAL BOARD	1	
		(ATTACHING PARTS)		
	MS20365-440	. . NUT	2	
	AN515-4-4	. . SCREW	2	
		----*----		
-35	MS20365-1032	. . NUT	7	
	AN960-10	. . WASHER	7	
	AN3-6A	. . BOLT	7	
-36	26-4632-3	. . BOX	1	

FIG. AND INDEX NO.	PART NUMBER	DESCRIPTION 1 2 3 4 5 6 7	UNITS PER ASSY	USABLE ON CODE
55-37	51X2B	. RECEIVER, VHF communication (GFE) (for details see T.O. 12R2-4-28-4)	1	
	DPA29C1-33S	. CONNECTOR, Plug, electrical (71468)	1	
-38	390E2	. BASE, Shock mount, electrical equipment (GFE) (ATTACHING PARTS)	1	
	MS20365-1032	. NUT	16	
	AN960-10L	. WASHER	16	
	NAS221-9	. SCREW ----*----	16	
-39	17L7A	. TRANSMITTER, VHF communication (GFE) (for details see T.O. 12R2-4-28-4)	1	
	DPAL24C2-33S3	. CONNECTOR, Plug, electrical (71468)	1	
	DPA24HV2-33S	. CONNECTOR, Plug, electrical (71468)	1	
-40	DY76/A1C10	. DYNAMOTOR, Intercommunication (GFE) (for details see T.O. 12R2-2A1C10-4)	1	
-41	MT1159/A1C10	. BASE, Shock mount, electrical equipment (GFE)	1	
	26-4646-1	. PANEL ASSY, Tacan and navigators relay (ATTACHING PARTS)	1	
	NAS220-9	. SCREW ----*----	6	
-42	AN3303-1	. . RELAY	7	
-43	MS3100E20-27S	. . CONNECTOR (ATTACHING PARTS)	7	
	MS20365-6	. . NUT	28	
	AN960-6	. . WASHER	28	
	AN515-6R6	. . SCREW ----*----	28	
-44	26-4646-3	. . PANEL ASSY (ATTACHING PARTS)	1	
	AN526-10R-8	. . SCREW ----*----	8	
-45	26-4646-5	. . PANEL ASSY	1	
-46	DY77/A1C10	. DYNAMOTOR, Intercommunication (GFE) (for details see T.O. 12R2-2A1C10-4)	1	
-47	MT1160/A1C10	. BASE, Shock mount, electrical equipment (GFE)	1	
-48	MS3106B20-29S	. CONNECTOR	1	
	MS3057-12	. ADAPTER	1	
-49	ID251/ARN	. INDICATOR, Bearing converter (GFE) (for details see T.O. 12R5-2ARN-174) (ATTACHING PARTS)	1	
	NAS487-15	. NUT	4	
-50	AN515-6-12	. SCREW ----*----	4	
-51	MS3106B18-1S	. CONNECTOR	1	
	MS3057-10	. ADAPTER	1	
-52	CV279/ARN	. DETECTOR, Phase network (GFE) (for details see T.O. 12R5-2ARN21-34)	1	
-53	MS3106B20-27S	. CONNECTOR	1	
	MS3057-12	. ADAPTER	1	
-54	C1	. AMPLIFIER, Compass signal (GFE) (for details see T.O. 5N2-2-3-4)	1	
-55	653278	. AMPLIFIER, Gyrosyn (GFE)	1	
	MS3106-20-27S	. CONNECTOR	1	
	MS3057-12	. ADAPTER	1	
-56	RT178/ARC27	. RECEIVER AND TRANSMITTER, UHF communication (GFE) (for details see T.O. 12R2-ARC27-4)	1	
-57	MT822C/ARC27	. BASE, Shock mount, electrical equipment (GFE) (for details see T.O. 12R2-ARC27-4)		
-58	R101A/ARN6	. RECEIVER, RA10 compass (GFE) (for details see T.O. 12R5-2ARN6-24)	1	
	UG646/U	. CONNECTOR	1	
-59	MT273E/ARN6	. BASE, Shock mount, electrical equipment (GFE) (for details see T.O. 12R5-2ARN6-24)	1	
-60	DY66B/ARN14	. DYNAMOTOR, VHF navigation (GFE) (for details see T.O. 12R5-2ARN14-14)	1	
	MS3057-6	. ADAPTER	1	
-61	MT628A/ARN14	. BASE, Shock mount, electrical equipment (GFE) (for details see T.O. 12R5-2ARN14-14)	1	

FIG. AND INDEX NO.	PART NUMBER	DESCRIPTION 1 2 3 4 5 6 7	UNITS PER ASSY	USABLE ON CODE
55-62	R540/ARN14C	. RECEIVER, VHF navigation (GFE) (for details see T.O. 12R5-2ARN14-14)	1	
	UG536/U	. CONNECTOR	1	
	UG27C/U	. ADAPTER	1	
	MS3057-16	. ADAPTER	1	
-63	MT627A/ARN14	. BASE, Shock mount, electrical equipment (GFE) (for details see T.O. 12R5-2ARN14-14)	1	
	26-4617-1	. RACK INSTL, Radio	NP	
-64	26-4617-15	. . BRACKET, Radio rack (ATTACHING PARTS)	1	
	MS20365-1032	. . NUT	4	
	NAS221-8	. . SCREW	4	
		----*----		
-65	26-4617-9	. . PLATE, Radio rack mounting (ATTACHING PARTS)	1	
	MS20365-1032	. . NUT	8	
	NAS221-8	. . SCREW	8	
		----*----		
-66	26-4617-7	. . PLATE, Radio rack mounting (ATTACHING PARTS)	1	
	MS20365-1032	. . NUT	12	
	NAS221-8	. . SCREW	12	
		----*----		
-67	26-4617-6	. . PLATE, Radio rack mounting (ATTACHING PARTS)	1	
	MS20365-1032	. . NUT	12	
	NAS221-8	. . SCREW	12	
		----*----		
-68	26-4617-5	. . PLATE, Radio rack mounting (ATTACHING PARTS)	1	
	MS20365-1032	. . NUT	6	
	NAS221-8	. . SCREW	6	
		----*----		
-69	26-4617-8	. . PLATE, Radio rack mounting (ATTACHING PARTS)	1	
	MS20365-1032	. . NUT	7	
	NAS221-8	. . SCREW	7	
		----*----		
-70	26-4617-3	. . PLATE, Radio rack mounting (ATTACHING PARTS)	1	
	MS20365-1032	. . NUT	12	
	NAS221-8	. . SCREW	12	
		----*----		
-71	26-4617-18	. . ANGLE, Radio rack (ATTACHING PARTS)	1	
	MS20365-1032	. . NUT	6	
	NAS221-8	. . SCREW	6	
		----*----		
	26-4606-1	. PANEL ASSY, UHF terminal (ATTACHING PARTS)	1	
	NAS221-9	. SCREW	4	
		----*----		
-72	MS25123-1-20	. . TERMINAL BOARD (ATTACHING PARTS)	4	
	AN515-6R16	. . SCREW	12	
	LS605-16-1-2	. . SPACER (03033)	12	
		----*----		
-73	26-4606-3	. . PANEL ASSY	1	
-74	C824A/A1C10	. CONTROL BOX, Intercommunication (GFE) (for details see T.O. 12R2-A1C10-4)	1	
	26-4605-1	. PANEL ASSY, HF terminal (ATTACHING PARTS)	1	
	NAS221-9	. SCREW	4	
		----*----		
-75	MS25123-1-20	. . TERMINAL BOARD	3	

FIG. AND INDEX NO.	PART NUMBER	DESCRIPTION 1 2 3 4 5 6 7	UNITS PER ASSY	USABLE ON CODE
55-		(ATTACHING PARTS)		
	AN515-6R16	. . SCREW	9	
	LS605-16-1-2	. . SPACER (03033)	9	
		----*----		
-76	26-4605-3	. . PANEL ASSY	1	
	26-4604-1	. PANEL ASSY, IFF terminal	1	
		(ATTACHING PARTS)		
	NAS221-9	. SCREW	6	
		----*----		
-77	MS25123-1-20	. . TERMINAL BOARD	5	
		(ATTACHING PARTS)		
	AN515-6R16	. . SCREW	15	
	LS605-16-1-2	. . SPACER (03033)	15	
		----*----		
-78	MS24149-D1	. . RELAY	2	
		(ATTACHING PARTS)		
	AN515-8R6	. . SCREW	4	
		----*----		
-79	26-4604-3	. . PANEL ASSY	1	
-80	MS3108B20-27P	. CONNECTOR	1	
	MS3057-12	. ADAPTER	1	
-81	MS3108B18-1P	. CONNECTOR	1	
	MS3057-10	. ADAPTER	1	
-82	RT279/APX25	. RECEIVER AND TRANSMITTER UNIT, IFF (GFE) (for details see T.O. 12P4-2APX25-4)	1	
	UG260B/U	. CONNECTOR	4	
	UG59B/U	. CONNECTOR	1	
	UG212C/U	. ADAPTER	1	
-83	MT1439/APX25	. BASE, Shock mount, electrical equipment (GFE) (for details see T.O. 12P4-2APX25-4)	1	
		(ATTACHING PARTS)		
	MS20365-1032	. NUT	16	
	AN960-10L	. WASHER	16	
	NAS221-9	. SCREW	16	
		----*----		
-84	F245/APX	. FILTER, Radio interference, IFF (GFE) (for details see T.O. 12P4-2APX25-4)	1	
	MS3108B14S5S	. CONNECTOR	1	
-85	MS3108B20-27P	. CONNECTOR	1	
	MS2057-12	. ADAPTER	1	
-86	MS3108B18-1S	. CONNECTOR	1	
	MS2057-10	. ADAPTER	1	
-87	KY95A/APX25	. CODER-KEYER UNIT, IFF (GFE) (for details see T.O. 12P4-2APX25-4)	1	
-88	MT1151/APX25	. BASE, Shock mount, electrical equipment (GFE) (for details see T.O. 12P4-2APX25-4)	1	
		(ATTACHING PARTS)		
	MS20365-1032	. NUT	16	
	AN960-10L	. WASHER	16	
	NAS221-9	. SCREW	16	
		----*----		
-89	618T3	. RECEIVER AND TRANSMITTER, High frequency (GFE)	1	
	DPE60-35S	. CONNECTOR, Plug, electrical (71468)	1	
	UG21D/U	. CONNECTOR	1	
	UG536	. CONNECTOR	1	
-90	390J1	. BASE, Shock mount, electrical equipment (GFE)	1	
		(ATTACHING PARTS)		
	MS20365-1032	. NUT	16	
	AN960-10L	. WASHER	16	
	NAS221-9	. SCREW	16	
		----*----		
-91	180L3	. TUNER, High frequency antenna (GFE)	1	
	SK-C16-23-1-2	. CONNECTOR, Plug, electrical (71468)	1	
-92	350D3	. BASE, Shock mount, electrical equipment (GFE)	1	
		(ATTACHING PARTS)		
	MS20365-1032	. NUT	16	

FIG. AND INDEX NO.	PART NUMBER	DESCRIPTION 1 2 3 4 5 6 7	UNITS PER ASSY	USABLE ON CODE
55-	AN960-10L	. WASHER	16	
	NAS221-9	. SCREW	16	
		----*----		
-93	51Z2	. RECEIVER, Marker beacon (GFE)	1	
	DPA24C2-33S	. CONNECTOR, Plug, electrical (71468)	1	
-94	390D2	. BASE, Shock mount, electrical equipment (GFE)	1	
		(ATTACHING PARTS)		
	MS20365-1032	. NUT	8	
	AN960-10L	. WASHER	8	
	NAS221-9	. SCREW	8	
		----*----		
-95	R322B/ARN18	. RECEIVER, Glideslope (GFE) (for details see T.O. 12R5-2ARN18-4)	1	
	DPD23-33S2	. CONNECTOR, Plug, electrical (71468)	1	
	UG536A/U	. CONNECTOR	1	
	UG27C/U	. ADAPTER	1	
-96	MT691/ARN18	. BASE, Shock mount, electrical equipment (GFE) (for details see T.O. 12R5-2ARN18-4)	1	
		(ATTACHING PARTS)		
	MS20365-1032	. NUT	4	
	AN960-10L	. WASHER	4	
	NAS221-9	. SCREW	4	
		----*----		
-97	RT220C/ARN21	. RECEIVER AND TRANSMITTER UNIT, Tacan (GFE) (for details see T.O. 12R5-2ARN21-4)	1	
	MS3106B18-9S	. CONNECTOR	1	
	MS3106B22-14S	. CONNECTOR	1	
	MS3057-12	. ADAPTER	2	
	MS3106B18-1P	. CONNECTOR	1	
	MS3057-10	. ADAPTER	1	
	UG59B/U	. CONNECTOR	1	
	UG212/U	. ADAPTER	1	
-98	MT928/ARN21	. BASE, Shock mount, electrical equipment (GFE) (for details see T.O. 12R5-2AN21-4)	1	
		(ATTACHING PARTS)		
	MS20365-1032	. NUT	16	
	AN960-10L	. WASHER	16	
	NAS221-9	. SCREW	16	
		----*----		
-99	DY107/ARC44	. DYNAMOTOR, FM communication (GFE) (for details see T.O. 12R2-2ARC44-24)	1	
	OC2935832	. CONNECTOR, Plug, electrical (12143)	1	
-100	MT1267A/AR	. BASE, Shock mount, electrical equipment (GFE)	1	
		(ATTACHING PARTS)		
	NAS221-9	. SCREW	4	
		----*----		
-101	CU361/ARC	. COUPLER, Antenna	1	
	UG88E/U	. CONNECTOR	1	
-102	RT294/ARC44	. RECEIVER AND TRANSMITTER UNIT, FM communication (GFE) (for details see T.O. 12R2-2ARC44-24)	1	
	UG88E/U	. CONNECTOR	1	
	N220940-1	. CONNECTOR, Plug, electrical (12143)	1	
-103	MT1268/AR	. BASE, Shock mount, electrical equipment (GFE)	1	
		(ATTACHING PARTS)		
	NAS221-9	. SCREW	4	
		----*----		
	26-4607-1	. PANEL ASSY, FM terminal	1	
		(ATTACHING PARTS)		
	NAS221-9	. SCREW	4	
		----*----		
-104	MS25123-1-20	. TERMINAL BOARD	3	
		(ATTACHING PARTS)		
	AN515-6R16	. SCREW	9	
	LS605-16-1-2	. SPACER	9	
		----*----		
-105	26-4607-3	. PANEL ASSY	1	
-106	620359	. TRANSMITTER, Induction compass (GFE)	1	
	620783	. COMPENSATOR (GFE)	1	
		(ATTACHING PARTS)		
	AN515B6-14R	. SCREW	3	
		----*----		

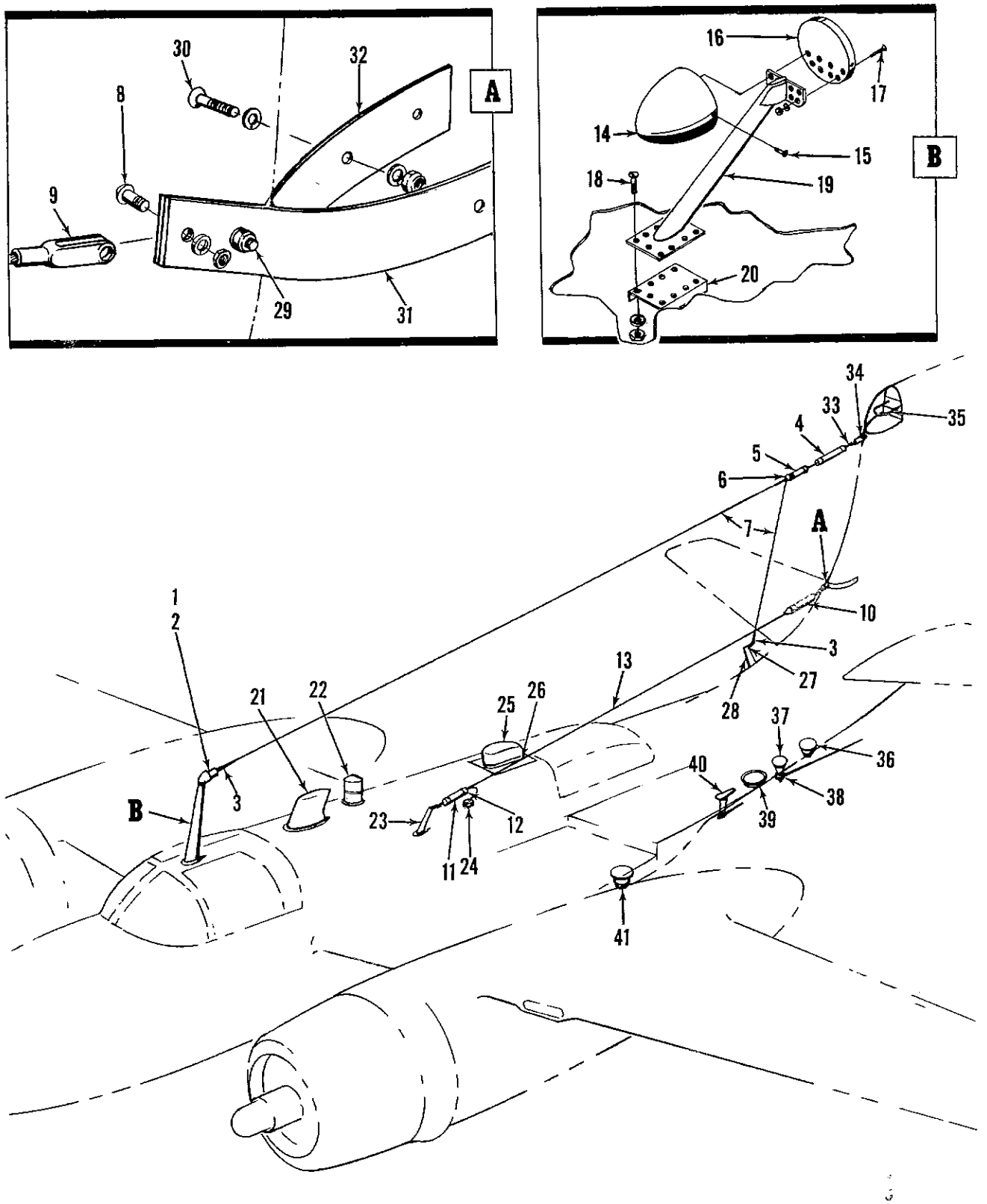

Figure 56. B26K Antenna Installation

FIG. AND INDEX NO.	PART NUMBER	DESCRIPTION 1 2 3 4 5 6 7	UNITS PER ASSY	USABLE ON CODE
56-	26-4643-1	ANTENNA INSTL, B26K (for NHA see fig. 2)	REF	
	MS20365-1032	. NUT	3	
	AN960-10	. WASHER	3	
-1	NAS221-19	. SCREW	3	
	26-4643-3	. WIRE ASSY, Antenna	1	
-2	RE132/ARC21	. . RADIO SET, Type AN/ARC-21 (GFE) (for details see T. O. 12R2-ARC21-4)	1	
-3	MS25056-1A	. . SLEEVE	2	
-4	MX274/AR	. . TENSION UNIT (GFE)	1	
-5	MX270/AR	. . INSULATOR, Strain (GFE)	1	
-6	47A40875	. . SPLICE, Cap (GFE)	1	
-7	26-4643-7	. . WIRE, Antenna	1	
	MS20500-1032	. NUT	1	
	AN960-10	. WASHER	1	
-8	AN3C5A	. BOLT	1	
	26-4643-5	. WIRE ASSY, Antenna	1	
-9	MS20115-3	. . SHACKLE	1	
-10	1L-5/U	. . TENSION UNIT (GFE)	1	
-11	13624	. . HOOK, Insulator (GFE)	1	
-12	47A40875	. . . SPLICE, Cap (GFE)	1	
-13	26-4643-9	. . WIRE, Antenna	1	
	26-4640-1	. MAST INSTL, Antenna	1	
-14	26-4645-1	. . CONE, HF antenna	1	
		(ATTACHING PARTS)		
-15	NAS220-8	. . SCREW	6	
		----*----		
-16	26-4640-11	. . SUPPORT	1	
		(ATTACHING PARTS)		
	MS20365-632A	. . NUT	8	
	AN960-6	. . WASHER	8	
-17	AN507-632R12	. . SCREW	8	
		----*----		
	MS20365-1032A	. . NUT	9	
	AN960-10	. . WASHER	9	
-18	AN507-1032R10	. . SCREW	9	
-19	26-4640-3	. . MAST ASSY, Antenna	1	
-20	26-4640-13	. . STIFFENER	1	
-21	37R2	. ANTENNA, VHF (GFE) (for details see T. O. 12R2-4-28-4)	1	
		(ATTACHING PARTS)		
	NAS221-21	. SCREW	4	
	NAS221-19	. SCREW	2	
		----*----		
	UG88/U	. CONNECTOR	1	
	UG306/U	. ADAPTER	1	
-22	AT256/ARC27	. ANTENNA, UHF (GFE)	1	
		(ATTACHING PARTS)		
	AN509-10R13	. SCREW	8	
		----*----		
	UG21C/U	. CONNECTOR	1	
	UG212C/U	. ADAPTER	1	
	26-4627-1	. STRUCTURE INSTL, Aft ADF sensing antenna	NP	
-23	26-4627-3	. . MAST ASSY	1	
		(ATTACHING PARTS)		
	MS20365D832	. . NUT	20	
	AN960-8	. . WASHER	20	
	AN509-8R14	. . SCREW	12	
	NAS220-9	. . SCREW	8	
		----*----		
-24	CU65A/ARN6	. COUPLER, Antenna (GFE)	1	
		(ATTACHING PARTS)		
	MS20365-1032	. NUT	4	
	AN960-10	. WASHER	4	
	AN526-6R13	. SCREW	4	
		----*----		

FIG. AND INDEX NO.	PART NUMBER	DESCRIPTION 1 2 3 4 5 6 7	UNITS PER ASSY	USABLE ON CODE
56-	CG105/ARN6	. CORD, Antenna (GFE)	1	
	UG646U	. ADAPTER	1	
-25	CW141/ARN6	. HOUSING ASSY, Loop antenna (GFE)	1	
	AS313B/ARN6	. ANTENNA, Loop (GFE)	1	
		(ATTACHING PARTS)		
	AN526-8R7	. SCREW	12	
		----*----		
-26	L225670A	. PLATE, Adapter (77068)	1	
		(ATTACHING PARTS)		
	NAS221-13	. SCREW	10	
	NAS221-11	. SCREW	4	
		----*----		
	C232291	. GASKET (77068)	2	
-27	MS25055-1A	. ELBOW	1	
-28	AB620A/AR	. MAST, Antenna (GFE)	1	
	26-4628-1	. ANCHOR INSTL, Shackle	NP	
	MS20365-832	. . NUT	1	
	AN960-8L	. . WASHER	1	
-29	NAS220-832	. . SCREW	1	
	MS20365-1032	. . NUT	4	
	AN960-10L	. . WASHER	8	
-30	NAS221-8	. . SCREW	4	
-31	26-4628-2L	. . ANCHOR	1	
-32	26-4628-2R	. . ANCHOR	1	
-33	4628	. CLIP (GFE)	1	
-34	4707	. CLIP (GFE)	1	
-35	37P3	. ANTENNA, Glideslope (alt 37P2, 37P4) (GFE)	1	
		(ATTACHING PARTS)		
	MS20365-832	. NUT	5	
	AN509-8-8	. SCREW	5	
		----*----		
	UG88/U	. CONNECTOR	1	
	UG201/U	. ADAPTER	1	
-36	AT741/APX25	. ANTENNA, Tacan (GFE)	1	
		(ATTACHING PARTS)		
	MS20365-632	. NUT	6	
	AN960-6	. WASHER	6	
	AN509-6R8	. SCREW	6	
		----*----		
	UG59B/U	. CONNECTOR	1	
	UG212/U	. ADAPTER	1	
-37	AB-340/ARC	. BASE, Antenna (GFE)	1	
		(ATTACHING PARTS)		
	AN509-10R13	. SCREW	6	
		----*----		
	UG27C/U	. ADAPTER	1	
	62B40637	. FITTING, Adapter (GFE)	1	
-38	AT454/ARC44	. ANTENNA, FM (GFE)	1	
		(ATTACHING PARTS)		
	NAS501-12-22A	. BOLT	1	
	AN565A1032H12	. SETSCREW	2	
		----*----		
-39	37X-2	. ANTENNA, Marker (GFE)	1	
		(ATTACHING PARTS)		
	NAS221-7	. SCREW	8	
	AN960-10	. WASHER	8	
	MS35338-43L	. WASHER	8	
		----*----		
	UG709/U	. CONNECTOR	1	
	UG567A/U	. ADAPTER	1	
-40	37J3	. ANTENNA, Vor (GFE) (for details see T. O. 12R5-2ARN14-14)	1	
		(ATTACHING PARTS)		
	NAS221-13	. SCREW	6	
		----*----		
	UG536/U	. CONNECTOR	1	
	UG27C/U	. ADAPTER	1	
-41	AT741/APX25	. ANTENNA, IFF (GFE)	1	

FIG. AND INDEX NO.	PART NUMBER	DESCRIPTION 1 2 3 4 5 6 7	UNITS PER ASSY	USABLE ON CODE
56-		(ATTACHING PARTS)		
	MS20365-632	. NUT	6	
	AN960-6	. WASHER	6	
	AN509-6R8	. SCREW	6	
		----*----		
	UG59B/U	. CONNECTOR	1	
	UG212C/U	. ADAPTER	1	

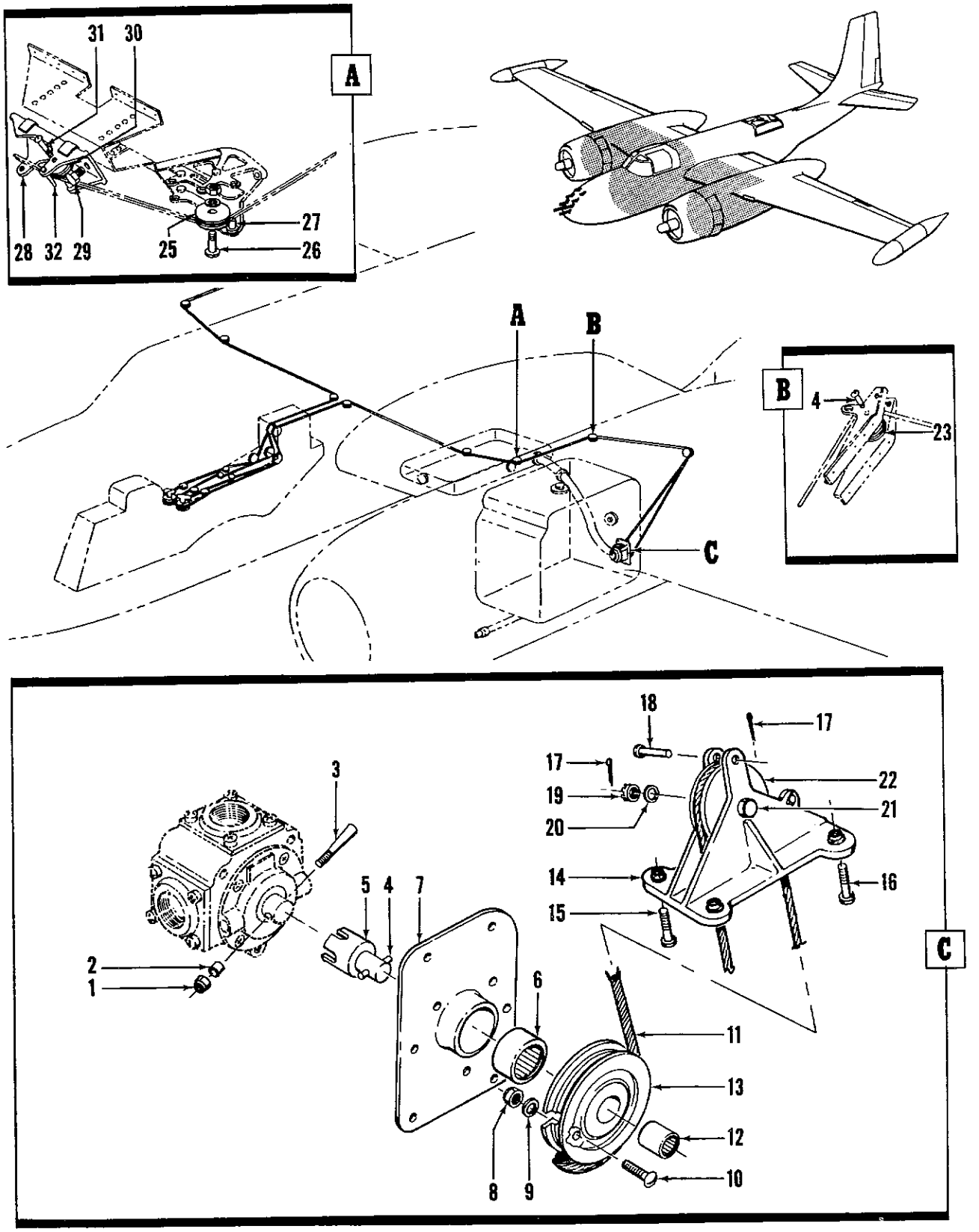

Figure 57. LH and RH Wing Fuel System Control Installation

FIG. AND INDEX NO.	PART NUMBER	DESCRIPTION 1 2 3 4 5 6 7	UNITS PER ASSY	USABLE ON CODE
57-	26-6005-1	CONTROL INSTL, Wing fuel system LH (for NHA see fig. 3)	REF	
	26-6005-2	CONTROL INSTL, Wing fuel system RH (for NHA see fig. 3)	REF	
-1	MS20365-632	. NUT	1	
-2	1059608C625-1250-125	. BUSHING, Sleeve (18355)	1	
-3	1206095	. PIN, Taper, fuel selector valve (18355)	1	
-4	1206067	. PIN, Straight, headless (18355)	1	
-5	1206013-2	. SHAFT, Fuel selector valve (18355)	1	
-6	B1612	. BEARING, Sleeve (60380)	1	
-7	26-6105-1	. BRACKET, Fuel selector LH	1	
	26-6105-2	. BRACKET, Fuel selector RH	1	
-8	MS20365-1032	. NUT	1	
-9	AN960D10	. WASHER	1	
-10	AN23-11A	. BOLT	1	
-11	26-6005-3	. WIRE ROPE ASSY, Single leg LH	1	
	26-6005-4	. WIRE ROPE ASSY, Single leg RH	1	
-12	117213-867-1000-687	. BUSHING, Needle bearing hardened (18355)	1	
-13	2057110-2	. PULLEY, Groove LH (18355)	1	
	2057110-3	. PULLEY, Groove RH (18355)	1	
	5206615	. CONTROL INSTL, Wing fuel LH (18355)	1	
	5206615-1	. CONTROL INSTL, Wing fuel RH (18355)	1	
-14	4206202	. . BRACKET ASSY, Wing fuel control LH (18355)	1	
	4206202-1	. . BRACKET ASSY, Wing fuel control RH (18355)	1	
		(ATTACHING PARTS)		
-15	AN3-12A	. . BOLT	2	
-16	AN3-13A	. . BOLT	2	
		----*----		
-17	MS24665-2-2	. . PIN, Cotter	3	
-18	143358-104	. . PIN, Pulley guard (18355)	2	
-19	AN310-3	. . NUT	1	
-20	AN960-10	. . WASHER	1	
-21	AN3-14	. . BOLT	1	
-22	AN210-2A	. . PULLEY	2	
	4127413	. CONTROL INSTL, Wing aft fuel LH (18355)	1	
	4127413-1	. CONTROL INSTL, Wing aft fuel RH (18355)	1	
-23	AN210-2A	. . PULLEY	2	
	AN320-3	. . NUT	1	
	AN960D10	. . WASHER	1	
-24	AN23-17	. . BOLT	2	
	4127455	. CONTROL INSTL, Wing forward fuel LH (18355)	1	
	4127455-1	. CONTROL INSTL, Wing forward fuel RH (18355)	1	
-25	AN210-2A	. . PULLEY	2	
	AN320-3	. . NUT	1	
	124682-3S12-034	. . WASHER (18355)	1	
-26	AN23-25	. . BOLT	1	
-27	143358-023	. . PIN, Pulley guard (18355)	2	
	5159533	. CONTROL INSTL, Wing fuel system LH (18355)	1	
	5159533-1	. CONTROL INSTL, Wing fuel system RH (18355)	1	
-28	5128626	. . BRACKET, Wing fuel system pulley LH (18355)	1	
	5128626-1	. . BRACKET, Wing fuel system pulley RH (18355)	1	
		(ATTACHING PARTS)		
	MS20365-1032	. . NUT	2	
	AN960-10	. . WASHER	2	
-29	AN3-6A	. . BOLT	2	
		----*----		
-30	AN210-1A	. . PULLEY	2	
	AN320-3	. . NUT	1	
	NAS43DD3-46	. . SPACER	1	
	AN960D10	. . WASHER	2	
-31	AN23-36	. . BOLT	1	
-32	NAS427K15	. . PIN	1	

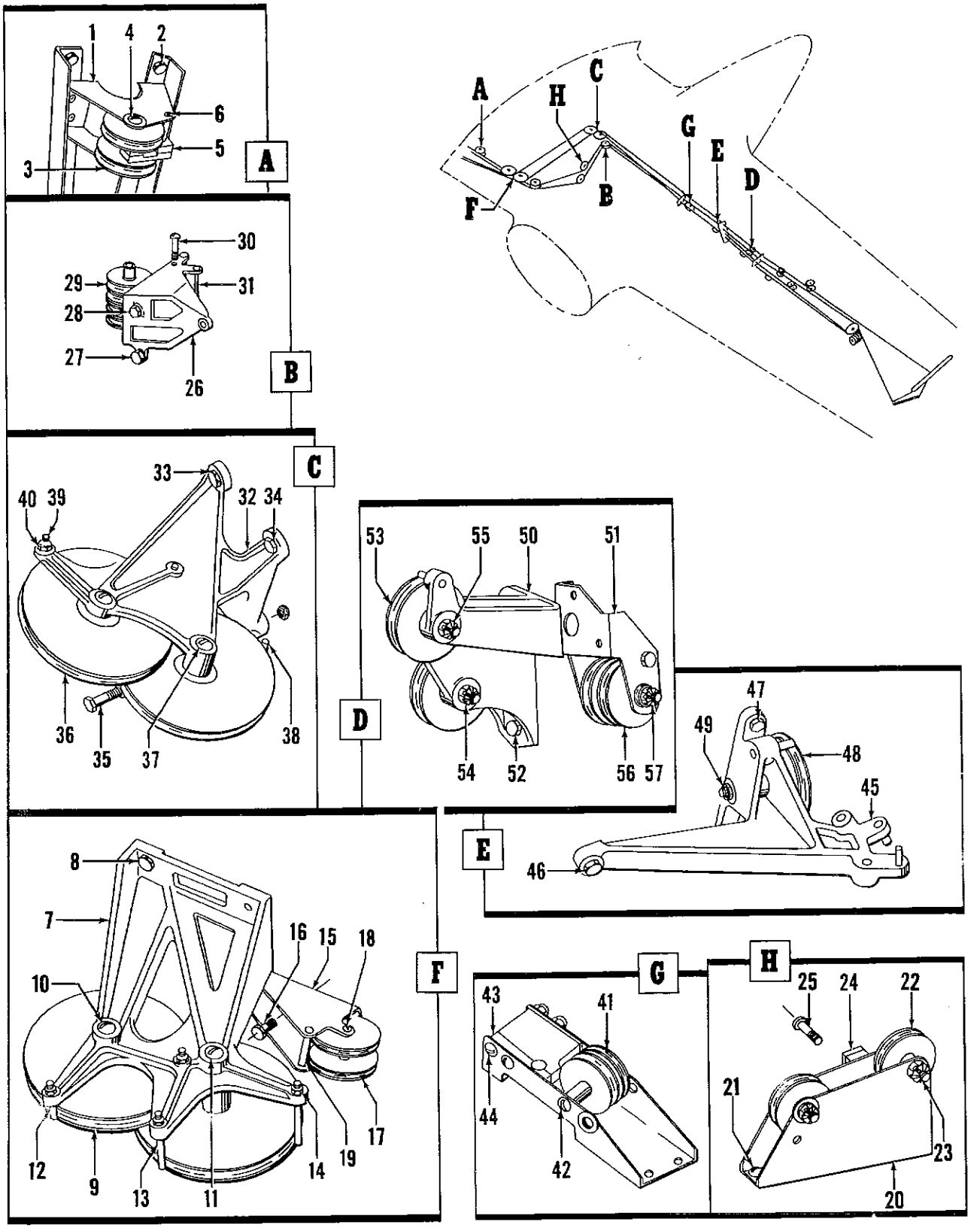

Figure 58. LH and RH Wing Flight Control Installations

FIG. AND INDEX NO.	PART NUMBER	DESCRIPTION 1 2 3 4 5 6 7	UNITS PER ASSY	USABLE ON CODE
58-	26-9700-1	FLIGHT CONTROL INSTL, Wing, LH (for NHA see fig. 3) ..... (for additional details see fig. 59)	REF	
	26-9700-2	FLIGHT CONTROL INSTL, Wing, RH (for NHA see fig. 3) ..... (for additional details see fig. 59)	REF	
	5128618	. CONTROL INSTL, Aileron trim, STA 52 (18355)(LH only)	1	
-1	4128263	. . BRACKET ASSY, Aileron trim pulley (18355)	1	
		(ATTACHING PARTS)		
	MS20365-832	. . NUT	4	
	AN960D8	. . WASHER	4	
-2	1029679P8-8	. . SCREW (18355)	4	
		----*----		
-3	AN210-1A	. . PULLEY	2	
		(ATTACHING PARTS)		
	AN320-3	. . NUT	1	
	AN960D10	. . WASHER	1	
-4	AN23-25	. . BOLT	1	
		----*----		
-5	1128829	. . FAIRLEAD, Aileron trim pulley (18355)	2	
		(ATTACHING PARTS)		
	MS20365-832	. . NUT	1	
	NAS43DD2-214	. . SPACER	1	
	AN960D8	. . WASHER	1	
-6	AN515-8-28	. . SCREW	1	
		----*----		
	5206755	. CONTROL INSTL, Wing flight, LH, sta 74 front spar (18355)	1	
	5206754	. CONTROL INSTL, Wing flight, RH, sta 74 front spar (18355)	1	
-7	5206618	. . BRACKET, Flight control, LH (18355)	1	
	5206617	. . BRACKET, Flight control, RH (18355)	1	
		(ATTACHING PARTS)		
	MS20365-524	. . NUT	4	
	AN960-516	. . WASHER	4	
-8	AN5-13A	. . BOLT	4	
		----*----		
-9	AN210-6A	. . PULLEY	2	
		(ATTACHING PARTS)		
	AN320-6	. . NUT	2	
	AN970-6	. . WASHER	2	
-10	AN26-30	. . BOLT	1	
-11	AN26-40	. . BOLT	1	
		----*----		
-12	2202008-2	. . GUARD (18355)	2	
-13	2202008-4	. . GUARD (18355)	2	
		(ATTACHING PARTS)		
-14	MS20365-1032	. . NUT	4	
		----*----		
-15	2206606	. . BRACKET, Front spar, aileron trim tab (18355)	1	
		(ATTACHING PARTS)		
	MS20365-1032	. . NUT	3	
	AN960-10	. . WASHER	3	
-16	AN3-6	. . BOLT	3	
		----*----		
-17	AN210-2A	. . PULLEY	2	
		(ATTACHING PARTS)		
	AN320-3	. . NUT	1	
	AN960-10	. . WASHER	1	
	NAS43DD3-32	. . SPACER	1	
-18	AN23-23	. . BOLT	1	
		----*----		
-19	NAS427K23	. . PIN	2	
	5128571	. CONTROL INSTL, Aileron trim, sta 80 (18355) (LH only)	1	
-20	2129160	. . BRACKET ASSY, Aileron trim control (18355)	1	
		(ATTACHING PARTS)		
	MS20365-1032	. . NUT	2	
-21	AN520-10-7	. . SCREW	2	

FIG. AND INDEX NO.	PART NUMBER	DESCRIPTION 1 2 3 4 5 6 7	UNITS PER ASSY	USABLE ON CODE
58-22	AN210-1A	. . PULLEY	2	
		(ATTACHING PARTS)		
	AN320-3	. . NUT	2	
	AN960-10	. . WASHER	4	
-23	AN23-18	. . BOLT	2	
		----*----		
-24	2203463	. . FAIRLEAD ASSY, Bomb release cable (18355)	1	
		(ATTACHING PARTS)		
-25	AN515-8-14	. . SCREW	2	
		----*----		
	5206756	. CONTROL INSTL, Wing flight, LH, sta 85 aft (18355)	1	
	5206756-1	. CONTROL INSTL, Wing flight, RH, sta 85 aft (18355)	1	
-26	5125741	. . BRACKET, Aileron trim tab and bomb release control, LH (18355)	1	
	5125741-1	. . BRACKET, Aileron trim tab and bomb release control, RH (18355)	1	
		(ATTACHING PARTS)		
	MS20365-1032	. . NUT	3	
	AN960D10	. . WASHER	3	
-27	AN3-10A	. . BOLT	2	
-28	AN3-11A	. . BOLT	1	
		----*----		
-29	AN210-2A	. . PULLEY	4	
		(ATTACHING PARTS)		
	AN320-3	. . NUT	1	
	AN960-10	. . WASHER	1	
	NAS43HT3-38	. . SPACER	1	
-30	AN23-34	. . BOLT	1	
		----*----		
-31	143358-123	. . PIN, Pulley guard (18355)	1	
-32	5206757	. . BRACKET, Wing flight control, LH (18355)	1	
	5206757-1	. . BRACKET, Wing flight control, RH (18355)	1	
		(ATTACHING PARTS)		
	MS20365-524	. . NUT	4	
	AN960-516	. . WASHER	4	
-33	AN5-11A	. . BOLT	1	
-34	AN5-12A	. . BOLT	2	
-35	AN5-13A	. . BOLT	1	
		----*----		
-36	AN210-6A	. . PULLEY	2	
		(ATTACHING PARTS)		
	AN320-6	. . NUT	2	
	AN960-6	. . WASHER	2	
-37	AN26-44	. . BOLT	2	
		----*----		
-38	143358-202	. . PIN, Pulley guard (18355)	2	
-39	2207008-2	. . GUARD (18355)	2	
		(ATTACHING PARTS)		
-40	MS20365-1032	. . NUT	2	
		----*----		
	4127454	. CONTROL INSTL, Wing flight, LH, sta 141 (18355)	1	
	4127453	. CONTROL INSTL, Wing flight, RH, sta 141 (18355)	1	
-41	AN210-1A	. . PULLEY	2	
		(ATTACHING PARTS)		
	AN320-3	. . NUT	1	
	AN960D10	. . WASHER	1	
	NAS43DD3-54	. . SPACER	1	
-42	AN23-30	. . BOLT	1	
		----*----		
-43	1127675	. . FAIRLEAD ASSY, Wing sta 141 (18355) (LH only)	1	
		(ATTACHING PARTS)		
	MS20365-832	. . NUT	2	
	AN960D8	. . WASHER	2	
-44	AN526-832-32	. . SCREW	2	
		----*----		
	5190557	. CONTROL INSTL, Wing flight, LH, sta 181 (18355)	1	
	5190557-1	. CONTROL INSTL, Wing flight, RH, sta 181 (18355)	1	

FIG. AND INDEX NO.	PART NUMBER	DESCRIPTION 1 2 3 4 5 6 7	UNITS PER ASSY	USABLE ON CODE
58-45	5190558	. . BRACKET ASSY, Wing flight control, LH (18355)	1	
	5190558-1	. . BRACKET ASSY, Wing flight control, RH (18355)	1	
		(ATTACHING PARTS)		
	MS20365-1032	. . NUT	3	
	AN960D10	. . WASHER	3	
-46	AN3-7A	. . BOLT	1	
-47	AN3-6A	. . BOLT	2	
		----*----		
-48	AN210-3A	. . PULLEY	1	
		(ATTACHING PARTS)		
	AN320-4	. . NUT	1	
	AN960D416	. . WASHER	1	
	AN970-4	. . WASHER	1	
-49	AN24-28	. . BOLT	1	
		----*----		
	3275743	. CONTROL INSTL, Flight, LH, sta 205 (18355)	1	
	3275743-1	. CONTROL INSTL, Flight, RH, sta 205 (18355)	1	
-50	3275689	. . BRACKET ASSY, Aileron control, LH (18355)	1	
	3275689-1	. . BRACKET ASSY, Aileron control, RH (18355)	1	
-51	3276009	. . BRACKET ASSY, Trim tab cable (18355)	1	
		(ATTACHING PARTS)		
	MS20365-428	. . NUT	3	
	AN960-416	. . WASHER	3	
-52	AN4-7A	. . BOLT	3	
		----*----		
-53	AN210-3A	. . PULLEY	2	
		(ATTACHING PARTS)		
	AN320-4	. . NUT	2	
	AN960-416	. . WASHER	2	
-54	AN24-27	. . BOLT	1	
-55	AN24-28	. . BOLT	1	
		----*----		
-56	AN210-1A	. . PULLEY	2	
		(ATTACHING PARTS)		
	AN320-3	. . NUT	1	
	AN960-10	. . WASHER	1	
-57	AN23-38	. . BOLT	1	
		----*----		

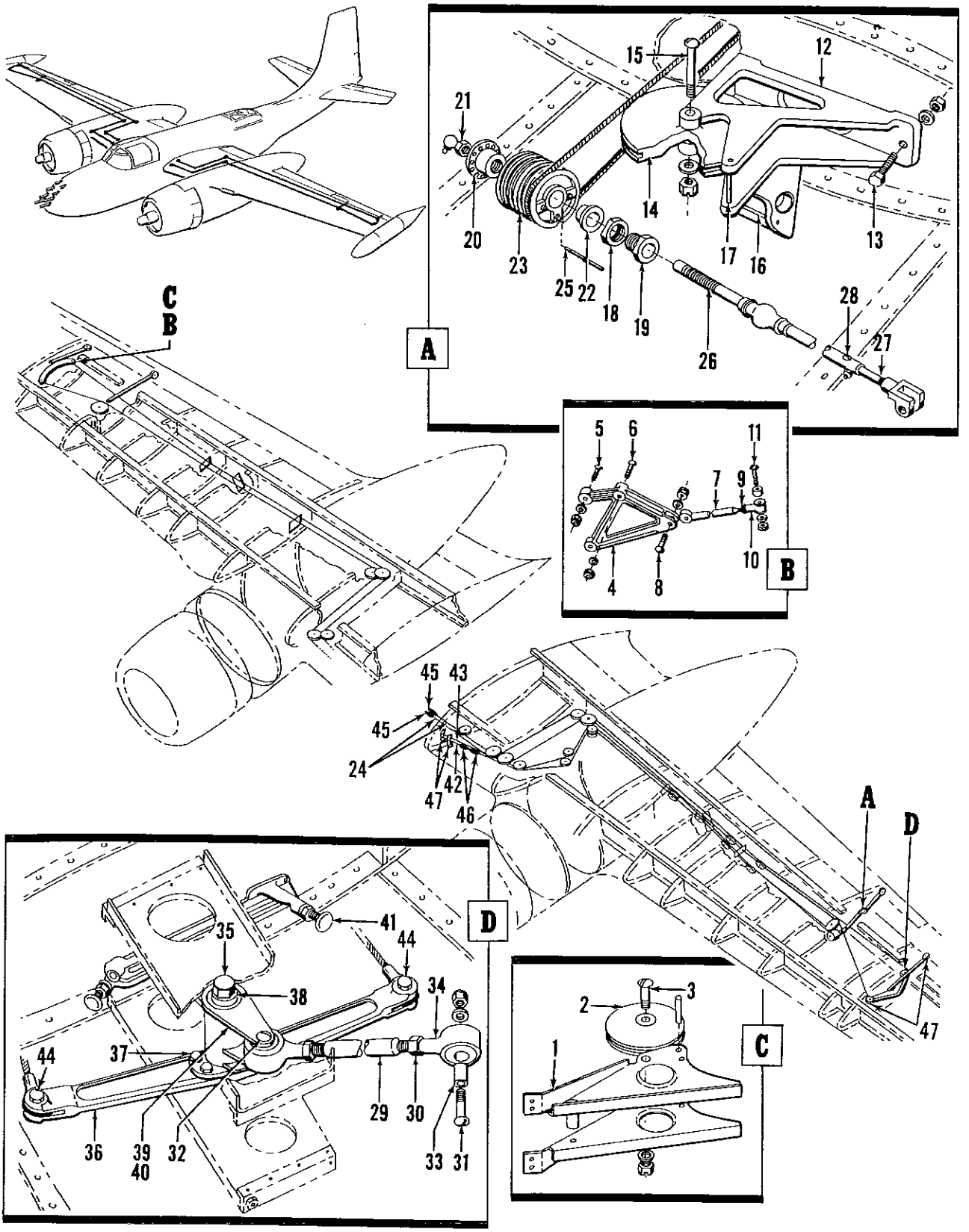

Figure 59. LH and RH Wing Flight Control Installations

FIG. AND INDEX NO.	PART NUMBER	DESCRIPTION 1 2 3 4 5 6 7	UNITS PER ASSY	USABLE ON CODE
59-	26-9700-1	FLIGHT CONTROL INSTL, Wing LH (for NHA see fig. 3) (for additional details see fig. 58)	REF	
	26-9700-2	FLIGHT CONTROL INSTL, Wing RH (for NHA see fig. 3) (for additional details see fig. 58)	REF	
	5125690	. CONTROL INSTL, Flight, sta 273 (18355) (RH only)	1	
-1	5125689	. . BRACKET ASSY, Aileron (18355)	1	
-2	AN210-5A	. . PULLEY	1	
		(ATTACHING PARTS)		
	AN320-6	. . NUT	1	
	AN960D616	. . WASHER	1	
-3	AN26-17	. . BOLT	1	
		----*----		
-4	4123791	. . BRACKET, Trim tab control (18355)	1	
		(ATTACHING PARTS)		
	MS20365-428	. . NUT	3	
	AN960D416	. . WASHER	3	
-5	AN509-416R19	. . SCREW	1	
-6	AN509-416R23	. . SCREW	2	
		----*----		
-7	2123243	. . ROD ASSY, Aileron trim tab control (18355)	1	
		(ATTACHING PARTS)		
	AN320-3	. . NUT	1	
	AN960-10	. . WASHER	1	
-8	AN23-18	. . BOLT	1	
		----*----		
	AN207D3	. . . BEARING	1	
-9	AN316-4R	. . NUT	1	
-10	1122850	. . END ASSY, Aileron tab rod adjusting bearing (18355)	1	
		(ATTACHING PARTS)		
	AN320-3	. . NUT	1	
	AN960-10L	. . WASHER	1	
-11	AN23-17	. . BOLT	1	
		----*----		
	AR3	. . . BEARING (60380)	NP	
	5276249	. CONTROL INSTL, Flight, sta 273 (18355) (LH only)	1	
-12	5125702	. . BRACKET, Aileron trim tab control (18355)	1	
		(ATTACHING PARTS)		
	MS20365-1032	. . NUT	4	
	AN960D10	. . WASHER	4	
-13	AN3-7A	. . BOLT	4	
		----*----		
	137690	. . . BUSHING, Aileron trim tab control screw (18355)	1	
-14	AN210-5A	. . PULLEY	1	
		(ATTACHING PARTS)		
	AN320-6	. . NUT	1	
	AN960-616	. . WASHER	1	
-15	AN26-34	. . BOLT	1	
		----*----		
-16	143358-219	. . PIN (18355)	2	
-17	NAS427K22	. . PIN	2	
-18	141708-5	. . NUT, Aileron tab push-pull tube	1	
-19	1127625	. . NUT, Tab control adjusting (18355)	1	
-20	1127624	. . NUT, Aileron tab adjustable control (18355)	1	
-21	1790	. . FITTING (01045)	1	
-22	1193368	. . BUSHING, Aileron trim tab tube (altered from No. 16 (Oilite))	1	
	4127568-4	. . DRUM ASSY, Aileron trim tab control (18355)	1	
-23	2123267	. . DRUM ASSY, Aileron tab adjusting control (18355)	1	
-24	2074407-9-9-13224	. . . CABLE ASSY, Swaged, 3/32 dia	1	
-25	144185-109	. . . PIN, Control cable anchoring (18355)	2	
-26	2208993	. . TUBE ASSY, Aileron tab push-pull (18355)	1	
-27	2208984	. . END ASSY, Aileron tab push-pull tube (18355)	1	
		(ATTACHING PARTS)		
	MS20365-832	. . NUT	2	
	AN960-10L	. . WASHER	2	
-28	1029679S8-14	. . SCREW, Slotted, round head (18355)	2	
		----*----		
	5125755	. DIFFERENTIAL MECHANISM INSTL, Aileron, LH, sta 325 (18355)	NP	

FIG. AND INDEX NO.	PART NUMBER	DESCRIPTION 1 2 3 4 5 6 7	UNITS PER ASSY	USABLE ON CODE
59-	5125755-1	. DIFFERENTIAL MECHANISM INSTL, Aileron, RH, sta 325 (18355)	NP	
-29	2123224	. . TUBE ASSY, Aileron push-pull (18355)	1	
-30	AN315-6R	. . NUT	2	
	1060325	. . END ASSY, Aileron control tube adjusting (18355)	2	
		(ATTACHING PARTS)		
	AN320-4	. . NUT	2	
	AN960D416	. . WASHER	2	
-31	AN24-28	. . BOLT	1	
-32	AN24-31	. . BOLT	1	
		----*----		
-33	AE4	. . . BEARING, Sleeve (77896)	1	
-34	1060325-2	. . . END ASSY, Aileron control tube adjusting (18355)	1	
	4127422	. . BELLCRANK ASSY, Aileron differential, LH (18355)	1	
	4127422-1	. . BELLCRANK ASSY, Aileron differential, RH (18355)	1	
		(ATTACHING PARTS)		
	AN310-5	. . NUT	1	
	AN960D516	. . WASHER	2	
-35	AN5-44	. . BOLT	1	
		----*----		
-36	4127423	. . . HORN, Aileron differential bellcrank (18355)	1	
	4123182	. . . ARM ASSY, Aileron bellcrank, LH (18355)	1	
	4123182-1	. . . ARM ASSY, Aileron bellcrank, RH (18355)	1	
		(ATTACHING PARTS)		
	AN320-4	. . . NUT	4	
	AN960D416	. . . WASHER	4	
-37	AN24-14	. . . BOLT	4	
		----*----		
-38	AN200K5	. . . BEARING	2	
-39	1195829	. . . . SPACER, Aileron bellcrank bearing (18355)	1	
-40	4123182-2	. . . . ARM, Aileron bellcrank, LH (18355)	1	
	4123182-3	. . . . ARM, Aileron bellcrank, RH (18355)	1	
-41	1114003-5-12	. . STOP, Coarse threaded, rubber covered (18355)	2	
		(ATTACHING PARTS)		
	MS35690-5	. . NUT	2	
	AN960D516	. . WASHER	2	
		----*----		
-42	2074410-7-10-33616	. CABLE ASSY, Aileron, left wing down (18355)	1	
-43	2074410-7-10-32300	. CABLE ASSY, Aileron, right wing down (18355)	1	
	AN320-5	. NUT	2	
	AN960D516	. WASHER	2	
	AN380-2-2	. PIN, Cotter	2	
-44	AN25-25	. BOLT	2	
-45	MS21251-16L	. BARREL, Turnbuckle	2	
-46	MS21251-46L	. BARREL, Turnbuckle	2	
-47	5206937	. CABLE SEAL, Wing LH (18355)	1	
	5207054	. CABLE SEAL, Wing RH (18355)	1	

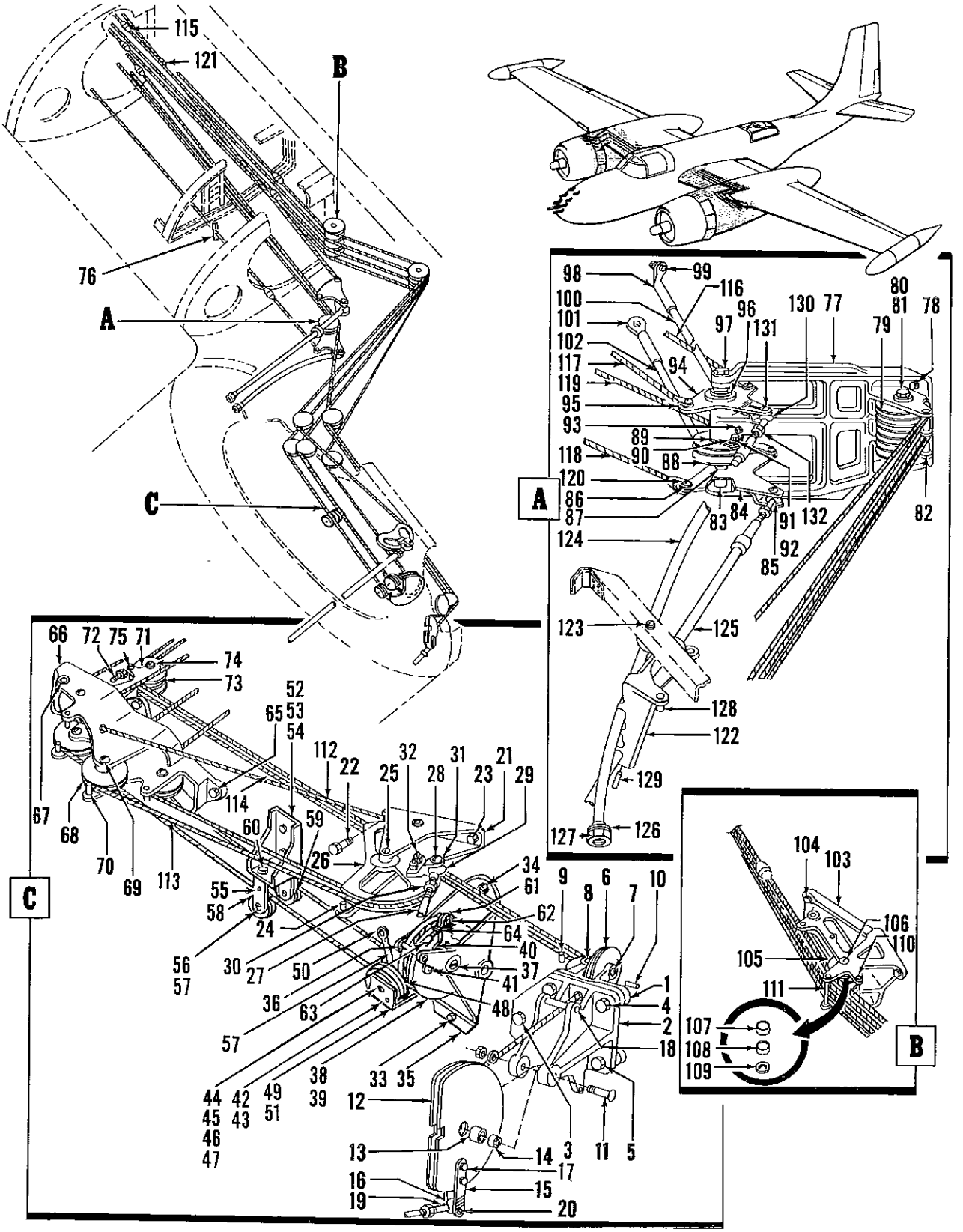

Figure 60. LH Wing Engine and Propeller Control Installation

FIG. AND INDEX NO.	PART NUMBER	DESCRIPTION 1 2 3 4 5 6 7	UNITS PER ASSY	USABLE ON CODE
60-	26-8402-1	CONTROL INSTL, Wing, engine and propeller (LH) (altered from 5208876 (18355)) (for NHA see fig. 3)	REF	
	5208779	. CONTROL INSTL, Firewall engine LH (18355)	NP	
-1	4205179	. . SUPPORT, Propeller pitch control cable pulley LH (18355)	1	
-2	4205173	. . SUPPORT, Propeller pitch control cable (18355)	1	
		(ATTACHING PARTS)		
	MS20365-1032	. . NUT	5	
	AN960D10	. . WASHER	5	
-3	AN3-6A	. . BOLT	1	
-4	AN3-10A	. . BOLT	2	
-5	AN3-11A	. . BOLT	2	
		----*----		
-6	AN210-2A	. . PULLEY	4	
	AN320-3	. . NUT	3	
	AN960D10	. . WASHER	3	
-7	AN23-19	. . BOLT	2	
-8	AN23-24	. . BOLT	1	
-9	143358-104	. . PIN, Pulley guard (18355)	2	
-10	NAS427K12	. . PIN	1	
	4205165	. . DRUM ASSY, Propeller pitch control (18355)	1	
		(ATTACHING PARTS)		
	AN320-3	. . NUT	1	
	AN960D10	. . WASHER	1	
-11	AN23-22	. . BOLT	1	
		----*----		
	4205167	. . . DRUM ASSY, Propeller pitch control pulley (18355)	1	
-12	4205167-2	. . . . DRUM (18355)	1	
-13	1128702	. . . . BUSHING, Knurled bearing retainer (18355)	1	
-14	AN207D3	. . . . BEARING	1	
-15	1205164	. . . ARM, Propeller pitch cable drum serrated (18355)	1	
-16	1205163	. . . ARM, Propeller pitch cable drum (18355)	1	
		(ATTACHING PARTS)		
	MS20365-1032	. . . NUT	2	
	AN960-10L	. . . WASHER	2	
-17	AN3-7A	. . . BOLT	2	
		----*----		
-18	143358-031	. . PIN, Pulley guard (18355)	2	
-19	REB3N	. . END, Rod (86174)	1	
		(ATTACHING PARTS)		
	AN320-3	. . NUT	1	
	AN960D10	. . WASHER	1	
-20	AN23-16	. . BOLT	1	
		----*----		
-21	5195407	. . BRACKET ASSY, Firewall mixture control LH (18355)	1	
		(ATTACHING PARTS)		
	MS20365-1032	. . NUT	3	
	AN960D10	. . WASHER	3	
-22	AN3-10A	. . BOLT	2	
-23	AN3-7A	. . BOLT	1	
		----*----		
-24	143358-102	. . PIN, Pulley guard (18355)	1	
	4195207	. . CRANK ASSY, Firewall mixture control LH (18355)	1	
		(ATTACHING PARTS)		
	AN320-3	. . NUT	1	
	AN960D10	. . WASHER	1	
-25	AN23-26	. . BOLT	1	
		----*----		
-26	4195207-2	. . . DRUM (18355)	1	
-27	26-8111-79	. . ROD ASSY	1	
		(ATTACHING PARTS)		
	MS20365-1032	. . NUT	1	
	AN960D10	. . WASHER	1	
-28	AN3-11A	. . BOLT	1	
		----*----		
-29	REB3N	. . . END, Rod (86174)	2	
-30	AN316-4	. . . NUT	2	

FIG. AND INDEX NO.	PART NUMBER	DESCRIPTION 1 2 3 4 5 6 7	UNITS PER ASSY	USABLE ON CODE
60-31	26-8111-89	. . ARM ASSY	1	
		(ATTACHING PARTS)		
	MS20365-1032	. . NUT	2	
	AN960D10	. . WASHER	2	
-32	AN509-10R14	. . SCREW	2	
		----*----		
	5208187	. . SUPPORT ASSY, Throttle bellcrank LH (18355)	1	
		(ATTACHING PARTS)		
	MS20365-1032	. . NUT	3	
	AN960D10	. . WASHER	3	
-33	AN3-7A	. . BOLT	2	
-34	AN507-1032-14	. . SCREW	1	
		----*----		
-35	5208187-2	. . . SUPPORT (18355)	1	
-36	146142-187-100	. . . PIN, Steel cadmium plated (18355)	2	
	26-8111-55	. . SUPPORT ASSY	1	
	26-8003	. . . PULLEY ASSY, Throttle control	1	
		(ATTACHING PARTS)		
	MS20365-1032	. . . NUT	1	
	AN960D10	. . . WASHER	1	
-37	AN3-26A	. . . BOLT	1	
		----*----		
-38	26-8003-2	. . . . PULLEY	1	
-39	AN207D3	. . . . BEARING	1	
-40	26-8999	. . . ARM, Throttle pulley extension	1	
		(ATTACHING PARTS)		
	MS20365-1032	. . . NUT	3	
	AN960D10	. . . WASHER	3	
-41	AN509-10R14	. . . SCREW	3	
		----*----		
-42	MS24665-2-2	. . . PIN, Cotter	2	
-43	MS20392-27	. . . PIN	2	
-44	MS20365-1032	. . . NUT	2	
-45	AN960D10	. . . WASHER	2	
-46	AN520-10R24	. . . SCREW	1	
	AN520-10R18	. . . SCREW	1	
-47	26-8111-59	. . . SPACER	4	
-48	AN210-2B	. . . PULLEY	2	
-49	26-8111-57	. . . BRACKET, Pulley	1	
	26-8111-58	. . . BRACKET, Pulley	1	
-50	26-8111-71	. . . BRACE ASSY	1	
	26-8111-75	. . . BRACE ASSY	1	
-51	26-8111-47	. . BRACKET ASSY	1	
-52	26-8111-49	. . SUPPORT ASSY	1	
		(ATTACHING PARTS)		
	MS20365-1032	. . NUT	4	
	AN960D10	. . WASHER	4	
-53	AN3-5A	. . BOLT	2	
-54	AN509-10R10	. . SCREW	2	
		----*----		
-55	MS20392-27	. . . PIN	2	
	MS24665-2-2	. . . PIN, Cotter	2	
-56	AN210-1B	. . . PULLEY	2	
		(ATTACHING PARTS)		
	MS20365-1032	. . . NUT	2	
	AN960D10	. . . WASHER	2	
	26-8111-59	. . . SPACER	4	
-57	AN520-10R18	. . . SCREW	2	
		----*----		
-58	26-8111-61	. . . BRACKET	1	
-59	26-8111-63	. . . BRACKET	1	
		(ATTACHING PARTS)		
	MS20365-1032	. . . NUT	4	
	AN960D10	. . . WASHER	4	
-60	AN3-4A	. . . BOLT	4	
		----*----		

FIG. AND INDEX NO.	PART NUMBER	DESCRIPTION 1 2 3 4 5 6 7	UNITS PER ASSY	USABLE ON CODE
60-61	REB3N	. . END, Rod (86174)	1	
		(ATTACHING PARTS)		
	AN320-3	. . NUT	1	
	AN960D10	. . WASHER	1	
-62	AN23-16	. . BOLT	1	
		----*----		
-63	2062682A906W	. . ROD ASSY, Quick disconnect (18355)	1	
-64	AN316-4R	. . NUT	1	
	5208151	. . BRACKET ASSY, Firewall engine control LH (18355)	1	
		(ATTACHING PARTS)		
	MS20365-1032	. . NUT	3	
	AN960D10	. . WASHER	3	
-65	AN3-7A	. . BOLT	3	
		----*----		
-66	5208151-2	. . . BRACKET (18355)	1	
-67	146142-187-100	. . . PIN, Steel cadmium plate (18355)	4	
-68	AN210-2A	. . PULLEY	4	
	AN320-3	. . NUT	4	
	AN960D10	. . WASHER	4	
-69	AN23-26	. . BOLT	4	
-70	NAS427K16	. . PIN	4	
-71	4205155	. . BRACKET, Firewall propeller pitch control LH (18355)	1	
		(ATTACHING PARTS)		
	MS20365-1032	. . NUT	4	
	AN960D10	. . WASHER	4	
-72	AN3-6A	. . BOLT	4	
		----*----		
-73	AN210-2A	. . PULLEY	2	
	AN320-3	. . NUT	1	
	AN960D10	. . WASHER	1	
-74	AN23-24	. . BOLT	1	
-75	143358-104	. . PIN, Pulley guard (18355)	2	
-76	4210264	. CONTROL INSTL, Wing air filter (18355)	NP	
	5208575	. CONTROL INSTL, Engine and propeller LH (18355)	NP	
-77	5208946	. . BRACKET, Engine and propeller LH (18355)	1	
		(ATTACHING PARTS)		
	MS20365-1032	. . NUT	2	
	AN960D10	. . WASHER	2	
-78	AN3-10A	. . BOLT	2	
		. ----*----		
-79	AN210-2A	. . PULLEY	4	
	AN310-3	. . NUT	1	
-80	AN3-27	. . BOLT	1	
-81	NAS43DD3-14	. . SPACER	2	
-82	143358-218	. . PIN, Pulley guard (18355)	2	
-83	NAS43DD3-32	. . SPACER	1	
-84	4128124	. . BELLCRACK ASSY, Supercharger blower LH (18355)	1	
-85	1125564	. . . BUSHING, Engine control bellcrank (18355)	1	
-86	131736-3S003	. . . BUSHING, Plain sleeve steel (18355)	2	
-87	2276334	. . BUSHING, Wing sta 85 supercharger blower bellcrank (18355)	1	
-88	AN210-2A	. . PULLEY	2	
-89	2276402	. . GUARD, Wing sta 85 propeller pitch control pulley (18355)	2	
-90	2276403	. . ANGLE, Wing sta 85 propeller pitch control pulley guard (18355)	1	
	MS20365-1032	. . NUT	2	
	AN960D10	. . WASHER	2	
-91	AN3-11A	. . BOLT	2	
-92	NAS43DD3-42	. . SPACER	2	
	MS20365-1032	. . NUT	1	
	AN960D10	. . WASHER	1	
-93	AN3-5A	. . BOLT	1	
-94	4128122	. . BELLCRANK ASSY, Carburetor air LH (18355)	1	
-95	131736-3S003	. . . BUSHING, Plain sleeve steel (18355)	2	
-96	2276333	. . BUSHING, Wing sta 85 carburetor air bellcrank (18355)	1	
	AN320-3	. . NUT	1	
	AN960-10	. . WASHER	1	
-97	AN3-65	. . BOLT	1	

FIG. AND INDEX NO.	PART NUMBER	DESCRIPTION 1 2 3 4 5 6 7	UNITS PER ASSY	USABLE ON CODE
60-98	1127730	. . END, Bracket support rod upper (18355)	1	
		(ATTACHING PARTS)		
	AN310-3	. . NUT	1	
	AN960D10	. . WASHER	1	
-99	AN3-7	. . BOLT	1	
		----*----		
-100	1208941-500	. . ROD, Engine control bracket support (18355)	1	
-101	1128831	. . END, Bracket support rod lower (18355)	1	
-102	1208941-502	. . ROD, engine control bracket support (18355)	1	
	5128638	. CONTROL INSTL, Wing, engine and propeller LH (18355)	NP	
-103	5128637	. . BRACKET, Engine and propeller control LH (18355)	1	
		(ATTACHING PARTS)		
	MS20365-428	. . NUT	3	
	AN960D416	. . WASHER	3	
-104	AN4-11A	. . BOLT	2	
	AN4-12A	. . BOLT	1	
		----*----		
-105	AN210-2A	. . PULLEY	4	
-106	AN23-42	. . BOLT	1	
	AN960D10	. . WASHER	1	
	AN320-3	. . NUT	1	
-107	1074744-3D516	. . SPACER, Aluminum alloy for no. 10 bolt (18355)	1	
-108	1074744-3D141	. . SPACER (18355)	1	
-109	1074744-3D297	. . SPACER (18355)	1	
-110	NAS427K36	. . PIN	1	
-111	143358-207	. . PIN, Pulley guard (18355)	1	
-112	4154040-24	. CABLE ASSY, Wing mixture control 3/32-in. dia LH (18355)	1	
-113	4154040-32	. CABLE ASSY, Wing throttle control 3/32-in. dia LH (18355)	1	
-114	4154040-34	. CABLE ASSY, Wing propeller control 3/32-in. dia LH (18355)	1	
-115	AN155-16L	. BARREL	6	
-116	2074407-16-5-4424	. CABLE ASSY, Swaged type 3/32-in. dia (carburetor air aft (18355)	1	
-117	2074407-16-5-2806	. CABLE ASSY, Swaged type 3/32-in. dia (carburetor air forward (18355)	1	
-118	2074407-16-5-3030	. CABLE ASSY, Swaged type 3/32-in. dia (blower aft) (18355)	1	
-119	2074407-16-5-3030	. CABLE ASSY, Swaged type 3/32-in. dia (blower forward) (18355)	1	
	AN320-3	. NUT	4	
-120	AN23-9	. BOLT	4	
-121	MS21251-16S	. BARREL	6	
	5208576	. CONTROL INSTL, Flexible nacelle engine LH (18355)	NP	
-122	5128529	. . BRACKET, Flexible nacelle engine control LH (18355)	1	
		(ATTACHING PARTS)		
	AN310-3	. . NUT	3	
	AN960D10	. . WASHER	3	
-123	AN3-7	. . BOLT	3	
		----*----		
-124	B1129-1L	. . CONTROL ASSY, Carburetor air LH (89305)	1	
-125	B1130-1L	. . CONTROL ASSY, Supercharger blower LH (89305)	1	
-126	AN960-1416	. . WASHER	4	
-127	AN316-14R	. . NUT	2	
-128	NAS427K16	. . PIN	1	
-129	143358-221	. . PIN, Pulley guard (18355)	1	
-130	REB3N	. . END, Rod (86174)	2	
		(ATTACHING PARTS)		
	AN320-3	. . NUT	2	
	AN960D10	. . WASHER	2	
-131	AN23-16	. . BOLT	2	
		----*----		
-132	AN316-4R	. . NUT	2	

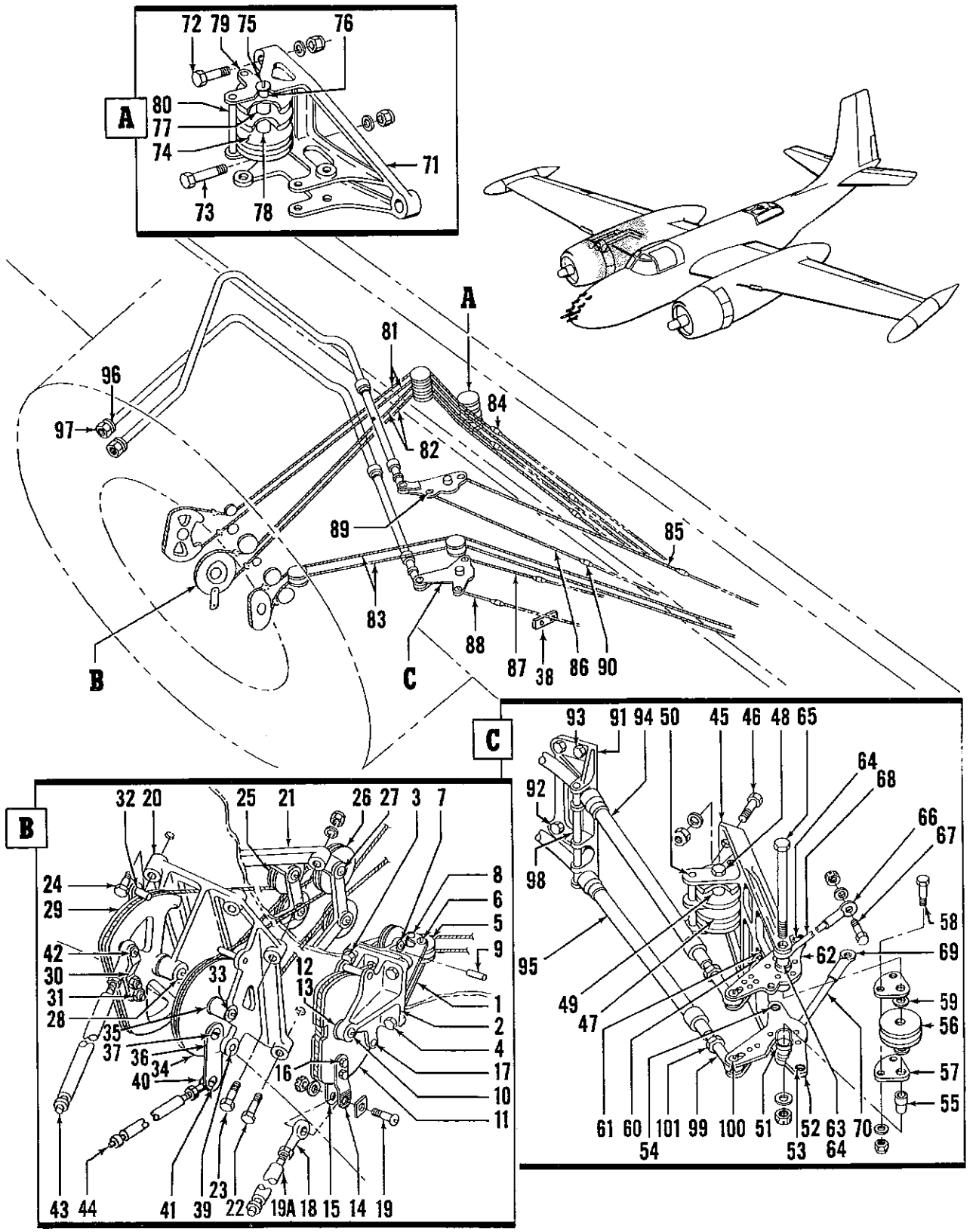

Figure 61. RH Wing Engine and Propeller Control Installation

FIG. AND INDEX NO.	PART NUMBER	DESCRIPTION 1 2 3 4 5 6 7	UNITS PER ASSY	USABLE ON CODE
61-	26-8402-2	CONTROL INSTL, Wing, engine and propeller(RH)(altered from 5208875 (18355)) (for NHA see fig. 3)	REF	
	5208578	. CONTROLS INSTL, Firewall, engine and carburetor air RH (18355)	NP	
-1	4205178	. . SUPPORT, Propeller pitch control cable pulley RH (18355)	1	
-2	4205173	. . SUPPORT, Propeller pitch control cable (18355)	1	
		(ATTACHING PARTS)		
	MS20365-1032	. . NUT	4	
	AN960-10	. . WASHER	4	
-3	AN3-10	. . BOLT	2	
-4	AN3-11	. . BOLT	2	
		----*----		
-5	AN210-2A	. . PULLEY	4	
		(ATTACHING PARTS)		
	AN320-3	. . NUT	3	
	AN960-10	. . WASHER	3	
-6	AN23-24	. . BOLT	1	
-7	AN23-19	. . BOLT	2	
		----*----		
-8	NAS427K13	. . PIN	1	
-9	143358-104	. . PIN, Pulley guard (18355)	1	
	4205165	. . DRUM ASSY, Propeller pitch control (18355)	1	
		(ATTACHING PARTS)		
	AN320-3	. . NUT	1	
	AN960-10	. . WASHER	1	
-10	AN23-22	. . BOLT	1	
		----*----		
	4205167	. . . DRUM ASSY, Propeller pitch control pulley (18355)	1	
-11	4205167-2	. . . . DRUM (18355)	1	
-12	1128702	. . . . BUSHING, Knurled bearing retainer (18355)	1	
-13	AN207D3	. . . . BEARING	1	
-14	1205164	. . . ARM, Propeller pitch cable drum serrated (18355)	1	
-15	1205163	. . . ARM, Propeller pitch cable drum (18355)	1	
		(ATTACHING PARTS)		
	MS20365-1032	. . . NUT	2	
	AN960-10L	. . . WASHER	2	
-16	AN3-7A	. . . BOLT	2	
		----*----		
-17	143358-031	. . PIN, Pulley guard (18355)	2	
-18	26-8111-29	. . ROD ASSY (86174)	1	
		(ATTACHING PARTS)		
	AN310-3	. . NUT	1	
	AN960-10	. . WASHER	1	
	1205638	. . WASHER, Serrated throttle bellcrank LH (18355)	1	
-19	AN23-16	. . BOLT	1	
		----*----		
-19A	REB3N	. . . END, Rod (86174)	1	
-20	5195452	. . BRACKET, Firewall manifold pressure regulator and mixture control RH (18355)	1	
-21	5195453	. . BRACKET ASSY, Firewall engine control pulley RH (18355)	1	
		(ATTACHING PARTS)		
	MS20365-428	. . NUT	5	
	AN960D416	. . WASHER	5	
-22	AN4-17A	. . BOLT	1	
-23	AN4-14A	. . BOLT	2	
-24	AN4-12A	. . BOLT	2	
		----*----		
-25	AN210-1A	. . PULLEY	3	
-26	AN210-2A	. . PULLEY	1	
		(ATTACHING PARTS)		
	AN320-3	. . NUT	4	
	AN960D10	. . WASHER	4	
-27	AN23-19	. . BOLT	4	
		----*----		
	4298896	. . CRANK ASSY, Firewall mixture control RH (18355)	1	
		(ATTACHING PARTS)		
	AN320-3	. . NUT	1	

FIG. AND INDEX NO.	PART NUMBER	DESCRIPTION 1 2 3 4 5 6 7	UNITS PER ASSY	USABLE ON CODE
61-	AN960D10	. . WASHER	1	
-28	AN23-29	. . BOLT	1	
		----*----		
-29	4195247-2	. . . DRUM (18355)	1	
-30	2195069	. . . ARM, Firewall manifold pressure regulator control RH (18355)	1	
		(ATTACHING PARTS)		
	MS20365-1032	. . . NUT	2	
	AN960D10	. . . WASHER	2	
-31	AN23-13A	. . . BOLT	2	
		----*----		
-32	NAS427K10	. . PIN	2	
	4195248	. . CRANK ASSY, Firewall manifold pressure regulator control RH (18355)	1	
		(ATTACHING PARTS)		
	AN320-3	. . NUT	1	
	AN960D10	. . WASHER	1	
-33	AN23-40	. . BOLT	1	
		----*----		
	26-8003	. . . PULLEY ASSY, Throttle control	1	
-34	26-8003-2	. . . . PULLEY	1	
-35	AN207D3	. . . . BEARING	1	
-36	26-8999-1	. . . ARM, Throttle and pulley extension	1	
		(ATTACHING PARTS)		
	MS20365-1032	. . . NUT	3	
	AN960-10	. . . WASHER	3	
-37	AN509-10-10	. . . SCREW	3	
		----*----		
-38	4210264-1	. . CONTROL INSTL, Air filter, wing (18355)	NP	
-39	NAS427K10	. . PIN	2	
-40	REB3N	. . END, Rod (86174)	2	
		(ATTACHING PARTS)		
	AN320-3	. . NUT	2	
	AN960D10	. . WASHER	2	
-41	AN23-16	. . BOLT	1	
-42	AN23-26	. . BOLT	1	
		----*----		
-43	2062641-612A	. . ROD ASSY, Flash weld quick disconnect control (18355)	1	
-44	2062641-1000A	. . ROD ASSY, Flash weld quick disconnect control (18355)	1	
	5208575-1	. CONTROL INSTL, Engine and propeller sta 85 RH (18355)	NP	
-45	5208946-1	. . BRACKET, Engine and propeller (18355)	1	
		(ATTACHING PARTS)		
	MS20365-1032	. . NUT	2	
	AN960D10	. . WASHER	2	
-46	AN3-10A	. . BOLT	2	
		----*----		
-47	AN210-2A	. . PULLEY	4	
		(ATTACHING PARTS)		
	AN310-3	. . NUT	1	
-48	AN3-27	. . BOLT	1	
		----*----		
-49	NAS43DD3-14	. . SPACER	1	
-50	143358-218	. . PIN, Pulley guard (18355)	2	
-51	NAS43DD3-32	. . SPACER	1	
-52	4128124-1	. . BELLCRANK ASSY, Supercharger blower RH (18355)	1	
-53	1125564	. . . BUSHING, Engine control bellcrank (18355)	1	
-54	131736-3S003	. . . BUSHING, Plain sleeve steel (18355)	2	
-55	2276334	. . BUSHING, Wing sta 85 supercharger blower bellcrank (18355)	1	
-56	AN210-2A	. . PULLEY	2	
-57	2276402	. . GUARD, Wing sta 85 propeller pitch control pulley (18355)	2	
		(ATTACHING PARTS)		
	MS20365-1032	. . NUT	2	
	AN960D10	. . WASHER	2	
-58	AN3-11A	. . BOLT	2	
		----*----		
-59	NAS43DD3-42	. . SPACER	2	

FIG. AND INDEX NO.	PART NUMBER	DESCRIPTION 1 2 3 4 5 6 7	UNITS PER ASSY	USABLE ON CODE
61-60	2276403	. . ANGLE, Wing sta 85 propeller pitch control pulley guard (18355)	1	
		(ATTACHING PARTS)		
	MS20365-1032	. . NUT	1	
	AN960D10	. . WASHER	1	
-61	AN3-5A	. . BOLT	1	
		----*----		
-62	4128121	. . BELLCRANK ASSY, Carburetor air RH (18355)	1	
-63	131736-3S003	. . . BUSHING, Plain sleeve steel (18355)	2	
-64	2276333	. . BUSHING, Wing sta 85 carburetor air bellcrank (18355)	1	
	AN320-3	. . NUT	1	
	AN960-10	. . WASHER	1	
-65	AN3-65	. . BOLT	1	
-66	1127730	. . END, Bracket support rod upper (18355)	1	
		(ATTACHING PARTS)		
	AN310-3	. . NUT	1	
	AN960D10	. . WASHER	1	
-67	AN3-7	. . BOLT	1	
		----*----		
-68	1208941-500	. . ROD, Engine control bracket support (18355)	1	
-69	1127731	. . END, Bracket support rod lower (18355)	1	
-70	1208941-502	. . ROD, Engine control bracket support (18355)	1	
	5128638-1	. CONTROL INSTL, Wing, engine and propeller sta 84 RH (18355)	NP	
-71	5128637-1	. . BRACKET, Engine and propeller control (18355)	1	
		(ATTACHING PARTS)		
	MS20365-428	. . NUT	3	
	AN960D416	. . WASHER	3	
-72	AN4-11A	. . BOLT	2	
-73	AN4-12A	. . BOLT	1	
		----*----		
-74	AN210-2A	. . PULLEY	4	
		(ATTACHING PARTS)		
	AN320-3	. . NUT	1	
	AN960D10	. . WASHER	1	
-75	AN23-42	. . BOLT	1	
		----*----		
-76	1074744-3D156	. . SPACER, Aluminum alloy for no. 10 bolt (18355)	1	
-77	1074744-3D141	. . SPACER (18355)	1	
-78	1074744-3D297	. . BUSHING, Plain sleeve steel (18355)	1	
-79	NAS427K36	. . PIN	1	
-80	143358-207	. . PIN, Pulley guard (18355)	1	
-81	4154040-20	. CABLE ASSY, Wing mixture control 3/32-in. dia RH (18355)	1	
-82	4154040-22	. CABLE ASSY, Wing manifold pressure regulator control 3/32-in. dia RH (18355)	1	
-83	4154040-36	. CABLE ASSY, Wing propeller control 3/32-in. dia RH (18355)	1	
-84	MS21251-16L	. BARREL	6	
-85	2074407-16-5-2828	. CABLE ASSY, Swaged type 3/32-in. dia (carburetor air aft) (18355)	1	
-86	2074407-16-5-2828	. CABLE ASSY, Swaged type 3/32-in. dia (carburetor air forward) (18355)	1	
-87	2074407-16-5-3724	. CABLE ASSY, Swaged type 3/32-in. dia (lower aft) (18355)	1	
-88	2074407-16-5-2830	. CABLE ASSY, Swaged type 3/32-in. dia (blower forward) (18355)	1	
	AN320-3	. NUT	4	
-89	AN23-10	. BOLT	6	
-90	MS21251-16S	. BARREL	4	
	5208577	. CONTROL INSTL, Flexible nacelle engine RH (18355)	1	
-91	4128298	. . SUPPORT, Flexible nacelle engine control RH (18355)		
		(ATTACHING PARTS)		
	MS20365-1032	. . NUT	3	
	AN960D10	. . WASHER	3	
-92	AN3-24A	. . BOLT	1	
-93	AN3-14A	. . BOLT	2	
		----*----		
-94	B1129-1R	. . CONTROL ASSY, Carburetor air RH (89305)	1	
-95	B1130-1R	. . CONTROL ASSY, Supercharger blower RH (89305)	1	
-96	AN960-1416	. . WASHER	4	

FIG. AND INDEX NO.	PART NUMBER	DESCRIPTION 1 2 3 4 5 6 7	UNITS PER ASSY	USABLE ON CODE
61-97	AN316-14R	. . NUT	2	
-98	143358-424	. . PIN, Pulley guard (18355)	1	
-99	REB3N	. . END, Rod (86174)	2	
		(ATTACHING PARTS)		
	AN320-3	. . NUT	2	
	AN960D10	. . WASHER	2	
-100	AN23-16	. . BOLT	2	
		----*----		
-101	AN316-4R	. . NUT	2	

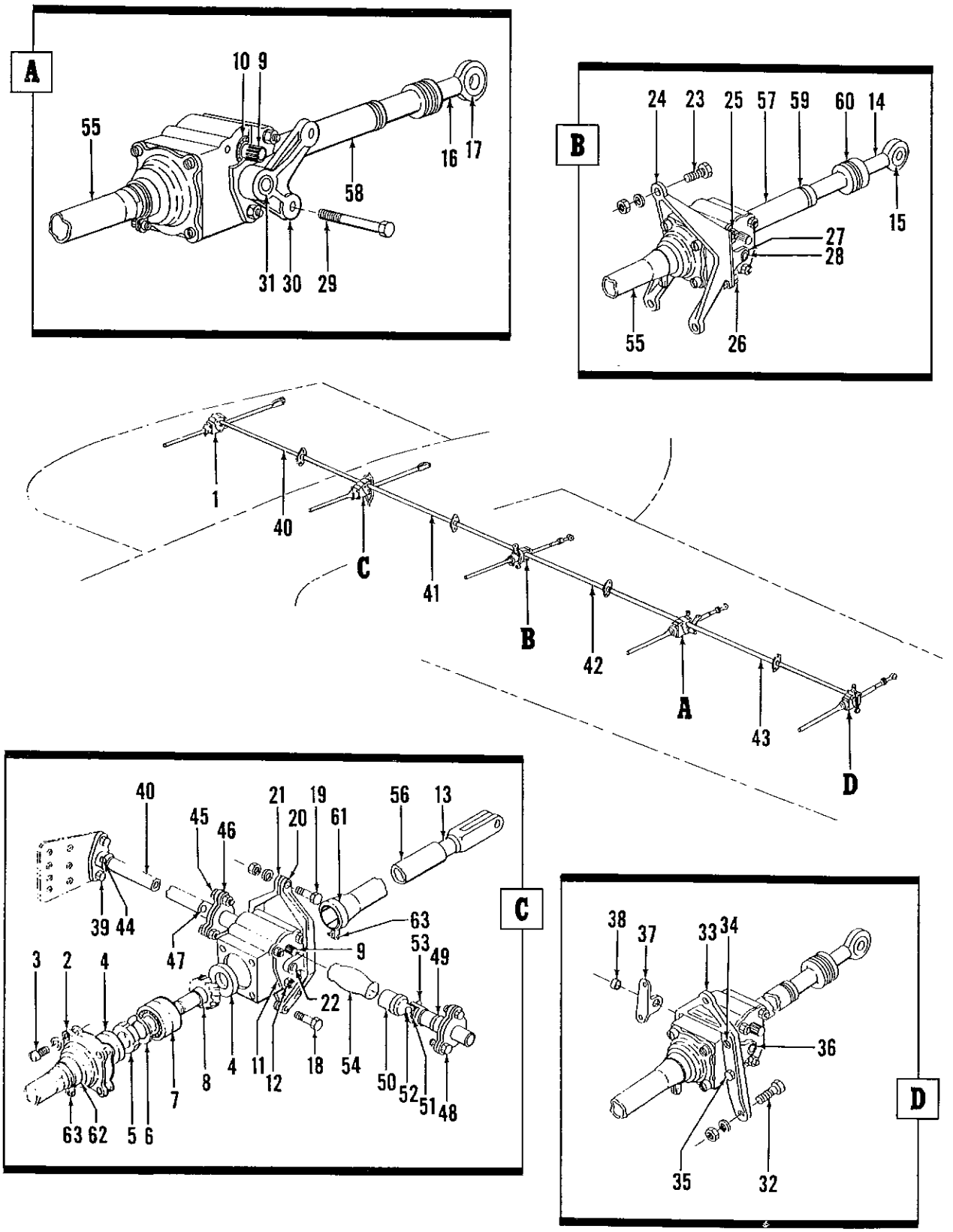

Figure 62. LH and RH Wing Flap Operating Mechanism Installations

FIG. AND INDEX NO.	PART NUMBER	DESCRIPTION 1 2 3 4 5 6 7	UNITS PER ASSY	USABLE ON CODE
62-	5122102	MECHANISM INSTL, Wing flap operating LH (18355) (for NHA see fig. 3)	REF	
	5122102-1	MECHANISM INSTL, Wing flap operating RH (18355) (for NHA see fig. 3)	REF	
	5191907-4	. BOX ASSY, Wing flap gear sta 33 and 81 (18355)	2	
	5191907-6	. BOX ASSY, Wing flap gear sta 143 and 269 (18355)	2	
	5191907-2	. BOX ASSY, Wing flap gear sta 203 (18355)	1	
-1	4128209	. . HOUSING, Wing flap gear box (18355)	1	
-2	2155363	. . CAP, Wing flap gear box (18355)	1	
	1128741	. . GASKET, Wing flap gear box cap (18355)	1	
		(ATTACHING PARTS)		
	AN960D10	. . WASHER	4	
-3	AN502-10-12	. . SCREW	4	
		----*----		
-4	13722	. . RETAINER, Oil (80201)	2	
-5	NO4	. . NUT, Lock (38443)	1	
-6	WO4	. . WASHER, Lock (38443)	1	
-7	7204DB	. . BEARING, Ball type 10 (86174)	2	
-8	2279652	. . WHEEL, Wing flap gear box worm (18355)	1	
-9	2126860	. . WORM, Wing flap gear box (18355)	1	
-10	T77039	. . BEARING, Ball (60380)	2	
-11	2126832	. . PLATE, Wing flap gear box side (18355)	2	
	1128742	. . GASKET, Wing flap gear box side plate (18355)	2	
		(ATTACHING PARTS)		
	MS20365-1032	. . NUT	3	
	AN960-10L	. . WASHER	3	
-12	AN3-24A	. . BOLT	3	
		----*----		
-13	2126835	. . SCREW ASSY, Inboard wing flap gear gox (18355)	2	
		(used on 5191907-4)		
-14	2126834	. . SCREW ASSY, Outboard wing flap end gear box (18355)	2	
		(used on 5191907-6)		
-15	RBC5	. . . BEARING, Needle (51588)	1	
-16	2126862	. . SCREW ASSY, Outboard wing flap center gear box (18355)	1	
		(used on 5191907-2)		
-17	RBC8	. . . BEARING, Needle (51588)	1	
	2126844	. SUPPORT ASSY, Inboard wing flap gear box LH (18355)	2	
	2126844-1	. SUPPORT ASSY, Inboard wing flap gear box RH (18355)	2	
		(ATTACHING PARTS)		
	MS20365-428	. NUT	3	
	AN960D416	. WASHER	3	
-18	AN4-14A	. BOLT	1	
-19	AN4-23A	. BOLT	2	
		----*----		
-20	2126844-2	. . SUPPORT, LH (18355)	1	
-21	2126844-3	. . SUPPORT, RH (18355)	1	
-22	1193805	. . BUSHING, Wing flap gear box support (18355)	1	
	2126769	. SUPPORT ASSY, Wing sta 144 outboard flap gear box LH (18355)	1	
	2126769-1	. SUPPORT ASSY, Wing sta 144 outboard flap gear box RH (18355)	1	
		(ATTACHING PARTS)		
	MS20365-428	. NUT	3	
	AN960D416	. WASHER	3	
-23	AN4-11A	. BOLT	3	
		----*----		
-24	2126767	. . SUPPORT, Wing sta 144 outboard flap gear box LH (18355)	1	
	2126767-1	. . SUPPORT, Wing sta 144 outboard flap bear box RH (18355)	1	
	1127747	. . CLIP ASSY, Wing sta 144 outboard flap gear box support (18355)	2	
		(ATTACHING PARTS)		
	MS20365-428	. . NUT	4	
	AN960D416	. . WASHER	4	
-25	AN509-416R15	. . SCREW	2	
-26	AN4-7A	. . BOLT	2	
		----*----		
-27	1127747-2	. . . CLIP (18355)	1	

FIG. AND INDEX NO.	PART NUMBER	DESCRIPTION 1 2 3 4 5 6 7	UNITS PER ASSY	USABLE ON CODE
62-28	1193805	. . . BUSHING, Wing flap gear box support (18355)	1	
	2129150	. SUPPORT ASSY, Wing sta 204 outboard flap gear box LH (18355)	1	
	2129150-1	. SUPPORT ASSY, Wing sta 204 outboard flap gear box RH (18355)	1	
		(ATTACHING PARTS)		
	MS20365-428	. NUT	2	
	AN960D416	. WASHER	2	
-29	AN4-52A	. BOLT	2	
		----*----		
-30	2129150-2	. . SUPPORT, LH (18355)	1	
	2129150-3	. . SUPPORT, RH (18355)	1	
-31	1193805	. . BUSHING, Wing flap gear box support (18355)	1	
	2126768	. SUPPORT ASSY, Wing sta 271 outboard flap gear box LH (18355)	1	
	2126768-1	. SUPPORT ASSY, Wing sta 271 outboard flap gear box RH (18355)	1	
		(ATTACHING PARTS)		
	MS20365-428	. NUT	3	
	AN960D416	. WASHER	3	
-32	AN4-11A	. BOLT	3	
		----*----		
-33	2126766	. . SUPPORT, Wing sta 271 outboard flap gear box LH (18355)	1	
	2126766-1	. . SUPPORT, Wing sta 271 outboard flap gear box RH (18355)	1	
	1127746	. . CLIP ASSY, Wing sta 271 outboard flap gear box support LH (18355)	1	
	1127746-1	. . CLIP ASSY, Wing sta 271 outboard flap gear box support RH (18355)	1	
		(ATTACHING PARTS)		
	MS20365-428	. . NUT	2	
	AN960D416L	. . WASHER	2	
-34	AN24-11A	. . BOLT	2	
	MS20365-428	. . NUT	2	
	AN960C416	. . WASHER	2	
-35	AN4-6A	. . BOLT	2	
		----*----		
-36	1127746-2	. . . CLIP, LH (18355)	1	
-37	1127746-3	. . . CLIP, RH (18355)	1	
-38	1193805	. . . BUSHING, Wing flap gear box support (18355)	1	
	2129173	. TUBE ASSY, Wing sta 34 to 81 flap operating torque (18355)	1	
	2129176	. TUBE ASSY, Wing sta 84 to 141 flap operating torque (18355)	1	
	2193762	. TUBE ASSY, Wing sta 144 to 204 flap operating torque (18355)	1	
	2193764	. TUBE ASSY, Wing sta 204 to 269 flap operating torque (18355)	1	
		(ATTACHING PARTS)		
	MS20365-1032	. NUT	2	
	AN960D10	. WASHER	2	
-39	AN3-7A	. BOLT	2	
		----*----		
-40	2129173-2	. . TUBE (18355) (Used on 2129173)	1	
-41	2129176-2	. . TUBE (18355) (Used on 2129176)	1	
-42	2193764-2	. . TUBE (18355) (Used on 2193762)	1	
-43	2193764-2	. . TUBE (18355) (Used on 2193764)	1	
-44	AN38H10P10	. . PIN	4	
	1143652	. DISCONNECT ASSY, Wing flap operating torque sta 204 (18355)	3	
		(ATTACHING PARTS)		
	MS20365-428	. NUT	3	
-45	AN4-6A	. BOLT	3	
		----*----		
-46	1143652-2	. . DISCONNECT (18355)	1	
-47	146142-081-016	. . PIN (18355)	1	
	1194867	. JOINT ASSY, Flap operating small torque tube welded (18355)	1	

FIG. AND INDEX NO.	PART NUMBER	DESCRIPTION 1 2 3 4 5 6 7	UNITS PER ASSY	USABLE ON CODE
62-		(ATTACHING PARTS)		
	MS20365-428	. NUT	3	
-48	AN4-6A	. BOLT	3	
		----*----		
-49	2277110	. . HUB ASSY, Wing flap universal joint (18355)	1	
-50	2277109	. . HUB ASSY, Wing flap universal joint welded (18355)	1	
-51	A5013	. . BLOCK (87121)	1	
-52	A5014	. . OIL PIN (87121)	1	
-53	A5015	. . PIN (87121)	1	
-54	1151514	. BOOT ASSY, Wing flap universal joint (18355)	1	
-55	2190955	. SHROUD, Wing flap gear box forward (18355)	5	
-56	2151848	. SHROUD, Wing flap gear box inboard screw (18355)	2	
-57	2192073-6	. SHROUD, Flap screw outer (18355)	3	
	2192073-8	. SHROUD, Flap screw outer (18355)	3	
-58	2192075-10	. SHROUD, Flap screw inner (18355)	3	
	2192075-12	. SHROUD, Flap screw inner (18355)	3	
-59	1159941	. SPRING, Flap screw inner shroud lock (18355)	6	
-60	1159942	. SPRING, Flap screw outer shroud lock (18355)	3	
-61	AN735-16	. CLAMP	5	
-62	AN735-18	. CLAMP	5	
		(ATTACHING PARTS)		
	MS20365-832	. NUT	1	
-63	AN515-8-10	. SCREW	1	
		----*----		

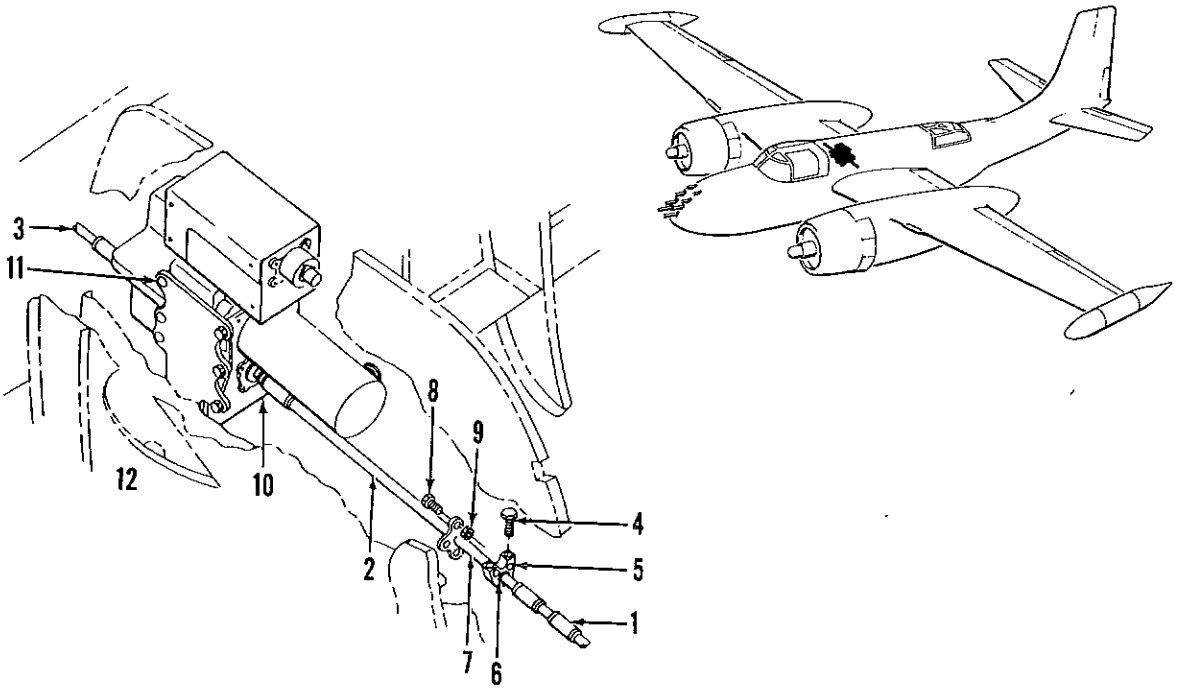

Figure 63. Fuselage Section Flap Operating Mechanism Installation

FIG. AND INDEX NO.	PART NUMBER	DESCRIPTION 1 2 3 4 5 6 7	UNITS PER ASSY	USABLE ON CODE
63-	26-1162-1	FLAP OPERATING MECHANISM INSTL, Fuselage section (for NHA see fig. 4)	REF	
-1	2195033	. TUBE ASSY, Flap operating torque wing sta 32 LH (18355)	2	
-2	2192061	. SHAFT ASSY, Flap operating fuselage section (18355)	1	
-3	2129174	. TUBE ASSY, Flap operating torque wing sta 32 RH (18355)	1	
	2190989	. BRACKET ASSY, Flap shaft left bearing (18355)	2	
		(ATTACHING PARTS)		
-4	MS20073-7	. BOLT	2	
		----*----		
-5	2190989-2	. . BRACKET (18355)	1	
-6	KS6	. . BEARING (21760)	1	
-7	2195056	. DISCONNECT ASSY, Fuselage section drive shaft welded (18355)	2	
-8	AN4-6A	. BOLT	6	
-9	MS20365-428	. NUT	6	
-10	26-1160-1	. CASE ASSY, Wing flap actuator (T.O. pending)	1	
		(ATTACHING PARTS)		
	MS20365-524	. NUT	2	
	AN960D516	. WASHER	2	
	2033901-12D328-008	. BUSHING (18355)	2	
-11	AN5-21A	. BOLT	2	
	MS20365-524	. NUT	2	
	AN960D516	. WASHER	2	
	2033901-12D328-006	. BUSHING (18355)	2	
-12	1048705-21	. BOLT (18355)	2	
		----*----		

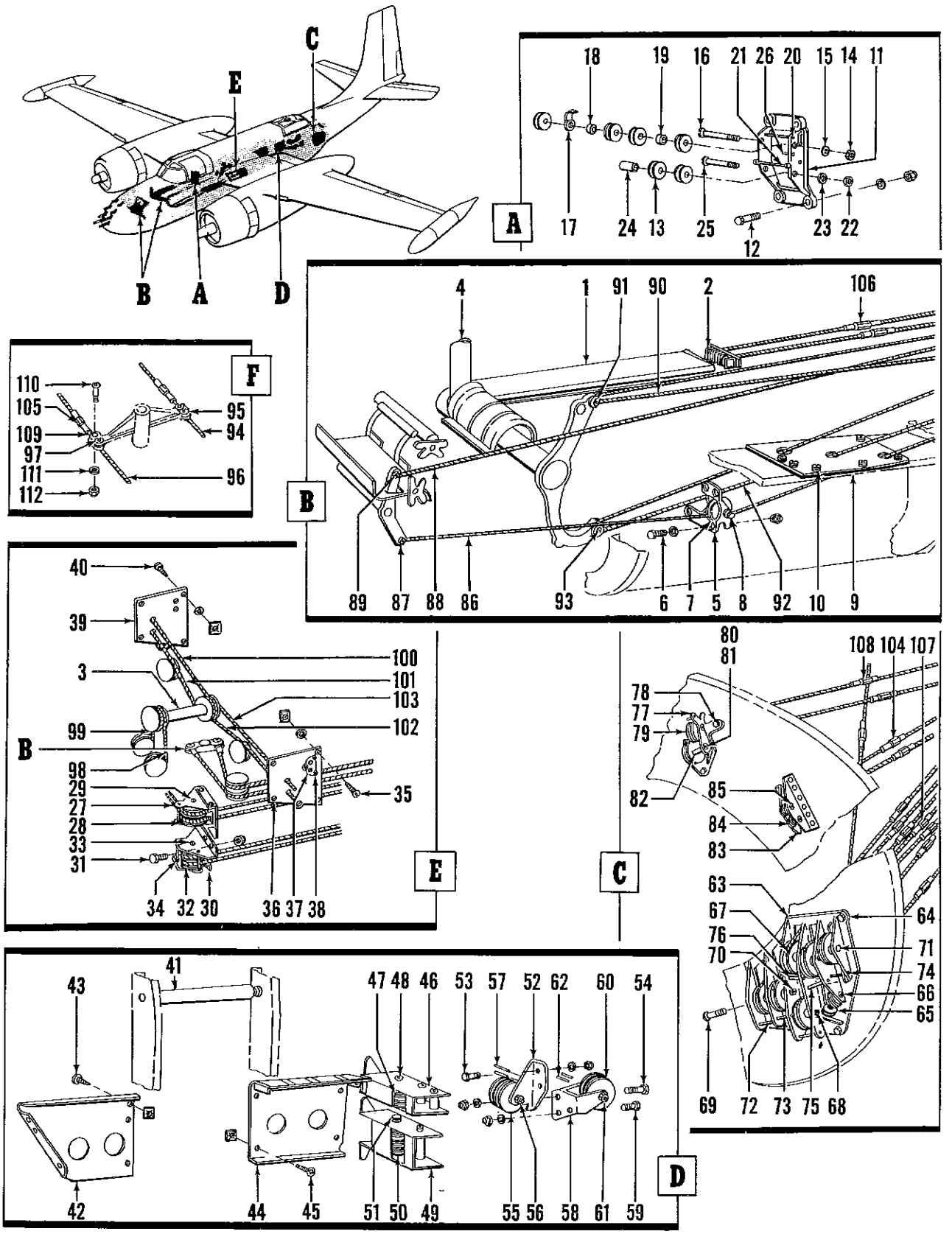

Figure 64. Fuselage Section Flight Control Installation

FIG. AND INDEX NO.	PART NUMBER	DESCRIPTION 1 2 3 4 5 6 7	UNITS PER ASSY	USABLE ON CODE
64-	26-9200	FLIGHT CONTROL INSTL, Fuselage section (altered from DAC 5153214) (for NHA see fig. 4)	REF	
-1	5191929	. CABLE GUARD INSTL, Aileron, sta 49 to 75 (18355) (for details see fig. 65)	NP	
-2	5150377	. FLIGHT CONTROL INSTL, Aileron, fuselage sta 74 (18355) (for details see fig. 65)	NP	
-3	5191005	. TORQUE TUBE AND CONTROL LOCK INSTL, Aileron (18355) (for details see fig. 65)	NP	
-4	26-9239	. DUAL CONTROLS INSTL (For details see fig. 66)	NP	
	4123763	. FLIGHT CONTROL INSTL, Fuselage sta 49 (18355)	1	
-5	4123746	. . BRACKET (18355) (ATTACHING PARTS)	1	
	MS20366-1032	. . NUT	4	
	AN960D10	. . WASHER	4	
-6	AN3-6A	. . BOLT ----*----	4	
-7	AN210-4A	. . PULLEY (ATTACHING PARTS)	1	
	AN320-4	. . NUT	1	
	AN960D10	. . WASHER	1	
-8	AN24-25	. . BOLT ----*----	1	
	4154140	. CABLE SEAL INSTL, Fuselage sta 70 (18355)	1	
-9	2155001	. . SEAL	1	
	AN960D8	. . WASHER	6	
-10	AN530-8-10	. . SCREW	6	
	5150046	. FLIGHT CONTROL INSTL, Fuselage sta 88 (18355)	1	
-11	5150048	. . BRACKET (18355) (ATTACHING PARTS)	1	
	MS20365-1032	. . NUT	4	
	AN960D10	. . WASHER	4	
-12	AN3-10A	. . BOLT ----*----	4	
-13	AN210-4A	. . PULLEY	6	
-14	AN320-4	. . NUT	1	
-15	AN960-D416	. . WASHER	1	
-16	AN24-58	. . BOLT	1	
-17	1151315	. . GUARD (18355)	1	
-18	NAS43DD4-14	. . SPACER	1	
-19	NAS43DD4-16	. . SPACER	1	
-20	NAS427K52	. . PIN	1	
-21	NAS427K16	. . PIN	1	
-22	AN320-4	. . NUT	1	
-23	AN960D416	. . WASHER	1	
-24	NAS43DD4-62	. . SPACER	1	
-25	AN24-54	. . BOLT	1	
-26	NAS427K24	. . PIN	2	
	5150053	. FLIGHT CONTROL INSTL, Fuselage sta 105 (18355)	1	
-27	2129322	. . BRACKET ASSY (18355)	1	
-28	AN210-2A	. . PULLEY (ATTACHING PARTS)	2	
	AN320-3	. . NUT	1	
	AN960D10	. . WASHER	1	
-29	AN23-16	. . BOLT ----*----	1	
-30	2129323	. . BRACKET ASSY (18355) (ATTACHING PARTS)	1	
	MS20365-1032	. . NUT	2	
-31	AN3-7A	. . BOLT ----*----	2	
-32	AN210-2A	. . PULLEY (ATTACHING PARTS)	2	
	AN320-3	. . NUT	1	
	AN960D10	. . WASHER	1	
-33	AN23-16	. . BOLT ----*----	1	

FIG. AND INDEX NO.	PART NUMBER	DESCRIPTION 1 2 3 4 5 6 7	UNITS PER ASSY	USABLE ON CODE
64-34	NAS427K14	. . PIN	2	
	5196708	. CABLE SEAL INSTL, Fuselage to wing (18355)	1	
	5196712	. . CABLE SEAL ASSY, Fuselage to wing RH (18355)	1	
		(ATTACHING PARTS)		
	A1778-8Z1	. . NUT (78553)	5	
	AN960D8	. . WASHER	5	
-35	AN530-8-16	. . SCREW	5	
		----*----		
-36	5196712-2	. . . SEAL (18355)	1	
-37	2155000	. . . SEAL (18355)	1	
		(ATTACHING PARTS)		
	A1778-8Z1	. . . NUT (78553)	3	
	AN960D8	. . . WASHER	3	
-38	AN530-8-8	. . . SCREW	3	
		----*----		
-39	5196709	. . CABLE SEAL, Fuselage to wing LH (18355)	1	
		(ATTACHING PARTS)		
	A1778-8Z1	. . NUT (78553)	5	
	AN960D8	. . WASHER	5	
-40	AN530-8-16	. . SCREW	5	
		----*----		
	5157662	. CABLE GUARD, Instl, fuselage sta 240 to 298 (18355)	1	
-41	5152237	. . GUARD ASSY (18355)	1	
-42	5157662-10	. . GUARD (18355)	1	
		(ATTACHING PARTS)		
	A1778-8Z1	. . NUT (78553)	6	
-43	AN530-8R8	. . SCREW	6	
		----*----		
-44	5157662-8	. . GUARD (18355)	1	
		(ATTACHING PARTS)		
	A1778-8Z1	. . NUT (78553)	6	
-45	AN530-8R8	. . SCREW	6	
		----*----		
	4157951	. FLIGHT CONTROLS INSTL, Fuselage sta 298 (18355)	1	
-46	4157956	. . BRACKET (18355)	1	
-47	AN210-3A	. . PULLEY	3	
		(ATTACHING PARTS)		
	AN320-4	. . NUT	1	
	AN960D416	. . WASHER	1	
-48	AN24-30	. . BOLT	1	
		----*----		
-49	4157955	. . BRACKET (18355)	1	
-50	AN210-3A	. . PULLEY	5	
		(ATTACHING PARTS)		
-51	AN4H31A	. . BOLT	1	
		----*----		
	5150114	. FLIGHT CONTROLS INSTL, Fuselage sta 315 (18355)	1	
-52	4129493	. . BRACKET (18355)	1	
		(ATTACHING PARTS)		
	MS20365-1032	. . NUT	2	
	AN960D10	. . WASHER	2	
-53	AN3-5A	. . BOLT	2	
-54	AN3-11A	. . BOLT	1	
		----*----		
-55	AN210-2A	. . PULLEY	2	
		(ATTACHING PARTS)		
	AN320-3	. . NUT	1	
	AN960D10	. . WASHER	1	
-56	AN23-24	. . BOLT	1	
		----*----		
-57	NAS427K24	. . PIN	2	
-58	4129494	. . BRACKET (18355)	1	
		(ATTACHING PARTS)		
	MS20365-1032	. . NUT	2	
	AN960D10	. . WASHER	2	
-59	AN3-5A	. . BOLT	2	
		----*----		

FIG. AND INDEX NO.	PART NUMBER	DESCRIPTION 1 2 3 4 5 6 7	UNITS PER ASSY	USABLE ON CODE
64-60	AN210-2A	. . PULLEY	2	
		(ATTACHING PARTS)		
	MS20365-1032	. . NUT	1	
	AN960D10	. . WASHER	1	
-61	AN23-24A	. . BOLT	1	
		----*----		
-62	NAS427K16	. . PIN	2	
	5190427	. FLIGHT CONTROLS INSTL, Fuselage sta 332 and 352 (18355)	1	
-63	5190428	. . BRACKET (18355)	1	
		(ATTACHING PARTS)		
	MS20365-1032	. . NUT	4	
-64	AN3-20A	. . BOLT	4	
		----*----		
-65	AN210-1A	. . PULLEY	2	
		(ATTACHING PARTS)		
	AN320-3	. . NUT	2	
	124682-3S12-064	. . WASHER (18355)	2	
-66	AN23-21	. . BOLT	2	
		----*----		
-67	AN210-4A	. . PULLEY	6	
		(ATTACHING PARTS)		
	AN320-4	. . NUT	6	
-68	AN24-44	. . BOLT	3	
-69	AN24-46	. . BOLT	1	
-70	AN24-52	. . BOLT	1	
-71	AN24-31	. . BOLT	1	
		----*----		
-72	143358-211	. . PIN (18355)	2	
-73	NAS427K44	. . PIN	1	
-74	143358-119	. . PIN (18355)	1	
-75	143358-221	. . PIN (18355)	1	
-76	143358-209	. . PIN (18355)	1	
-77	4190201	. . BRACKET (18355)	1	
		(ATTACHING PARTS)		
	MS20365-1032	. . NUT	3	
-78	AN3-7A	. . BOLT	3	
		----*----		
-79	AN210-2A	. . PULLEY	2	
		(ATTACHING PARTS)		
-80	AN320-3	. . NUT	2	
-81	AN23-30	. . BOLT	2	
		----*----		
-82	NAS43DD3-36	. . SPACER	2	
-83	2159704	. . BRACKET (18355)	1	
-84	AN210-1A	. . PULLEY	2	
		(ATTACHING PARTS)		
	AN320-3	. . NUT	2	
-85	AN23-13	. . BOLT	2	
		----*----		
-86	2074409-10-6-36300	. CABLE ASSY, Rudder nose right forward (18355)	1	
		(ATTACHING PARTS)		
	AN320-4	. NUT	1	
	AN960-416	. WASHER	1	
	MS24665-2-2	. PIN, Cotter	1	
-87	AN24-20	. BOLT, Eye	1	
		----*----		
-88	2074409-10-6-37709	. CABLE ASSY, Rudder nose left forward (18355)	1	
		(ATTACHING PARTS)		
	AN320-4	. NUT	1	
	AN960-416	. WASHER	1	
	MS24665-2-2	. PIN COTTER	1	
-89	AN24-20	. BOLT, Eye	1	
		----*----		
-90	2074409-10-6-33300	. CABLE ASSY, Elevator nose down FWD right and left (18355)	2	
		(ATTACHING PARTS)		
	AN320-4	. NUT	1	
	143908-008S104-062	. WASHER (18355)	1	
-91	AN24-29	. BOLT, Eye	1	
		----*----		

FIG. AND INDEX NO.	PART NUMBER	DESCRIPTION 1 2 3 4 5 6 7	UNITS PER ASSY	USABLE ON CODE
64-92	2205842	. CABLE ASSY, Elevator nose up FWD right and left (18355)	2	
		(ATTACHING PARTS)		
	AN320-4	. NUT	1	
	143908-008S104-062	. WASHER (18355)	1	
	MS24665-2-2	. PIN, Cotter	1	
-93	AN24-29	. BOLT	1	
		----*----		
-94	2074406-6-4-28616	. CABLE ASSY, Control lock forward (18355)	1	
		(ATTACHING PARTS)		
	AN320-3	. NUT	1	
	AN960-10	. WASHER	1	
	MS24665-2-2	. PIN, Cotter	1	
-95	AN23-11	. BOLT	1	
		----*----		
-96	2074406-6-4-27518	. CABLE ASSY, Control lock release FWD (18355)	1	
		(ATTACHING PARTS)		
	AN320-3	. NUT	1	
	AN960-10	. WASHER	1	
	MS24665-2-2	. PIN, Cotter	1	
-97	AN23-11	. BOLT	1	
		----*----		
-98	26-9226-12	. CABLE ASSY, Aileron right wing down (18355)	1	
-99	26-9226-14	. CABLE ASSY, Aileron left wing down (18355)	1	
-100	2153780-8	. CABLE ASSY, Right aileron right wing down (18355)	1	
-101	2153780-6	. CABLE ASSY, Right aileron left wing down (18355)	1	
-102	2153780-4	. CABLE ASSY, Left aileron right wing down (18355)	1	
-103	2153780-2	. CABLE ASSY, Left aileron left wing down (18355)	1	
-104	MS21251-8S	. BARREL, Turnbuckle	2	
-105	MS21251-16S	. BARREL, Turnbuckle	2	
-106	MS21251-32S	. BARREL, Turnbuckle	2	
-107	MS21251-32L	. BARREL, Turnbuckle	6	
-108	MS21251-16L	. BARREL, Turnbuckle	4	
-109	MS21254-16S	. EYE, Turnbuckle	2	
		(ATTACHING PARTS)		
-110	AN23-11	. BOLT	2	
-111	AN960-10	. WASHER	2	
-112	AN320-3	. NUT	2	
		----*----		

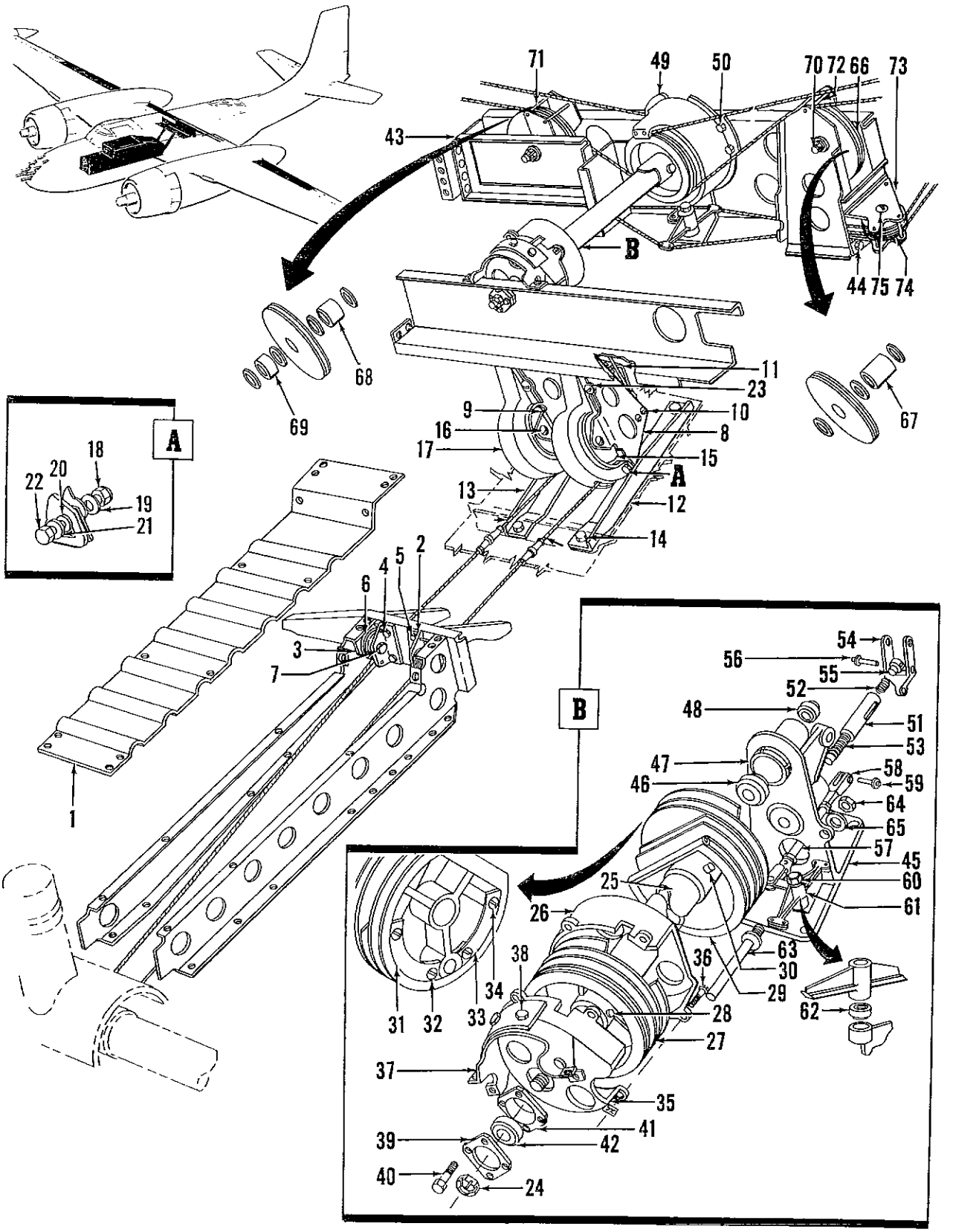

Figure 65. Fuselage Flight Controls and Cable Guard Installations

FIG. AND INDEX NO.	PART NUMBER	DESCRIPTION 1 2 3 4 5 6 7	UNITS PER ASSY	USABLE ON CODE
65-		FUSELAGE FLIGHT CONTROLS AND CABLE GUARD INSTALLATIONS. .		
	5191929	. CABLE GUARD INSTL, Aileron sta 49 to 75 (18355) (for NHA see fig. 64)	REF	
-1	5191929-6	. . COVER, Aileron cable guard (18355)	1	
		(ATTACHING PARTS)		
	AN530-8-6	. . SCREW	16	
		----*----		
	5150377	. FLIGHT CONTROL INSTL, Aileron, fuselage sta 74 (18355) (for NHA see fig. 64)	REF	
-2	2151899	. . BRACKET ASSY, Outboard aileron pulley (18355)	1	
-3	2151609	. . BRACKET ASSY, Inboard aileron pulley (18355)	1	
		(ATTACHING PARTS)		
	MS20365-1032	. . NUT	4	
	AN960D10L	. . WASHER	4	
-4	AN3-4A	. . BOLT	2	
-5	AN3-5A	. . BOLT	2	
		----*----		
-6	AN210-3A	. . PULLEY	2	
		(ATTACHING PARTS)		
	AN320-4	. . NUT	2	
	AN960D416	. . WASHER	2	
-7	AN24-15	. . BOLT	2	
		----*----		
	5191005	. TORQUE TUBE AND CONTROL LOCK INSTL, Aileron (18355) (for NHA see fig. 64)	REF	
	5191859	. . BRACKET ASSY, Aileron torque tube fwd support (18355)	1	
-8	5191859-4	. . . BRACKET, Aileron torque tube fwd support, LH (18355)	1	
	5191859-6	. . . BRACKET, Aileron torque tube fwd support, RH (18355)	1	
		(ATTACHING PARTS)		
	MS20365-832	. . . NUT	4	
	AN960D8	. . . WASHER	4	
	NAS43DD048	. . . SPACER	4	
-10	AN515-8-20	. . . SCREW	4	
		----*----		
-11	4191501	. . . GUARD (18355)	1	
-12	1191750	. . ANGLE, Aileron bracket pulley, LH (18355)	1	
-13	1191750-1	. . ANGLE, Aileron bracket pulley, RH (18355)	1	
		(ATTACHING PARTS)		
	MS20365-428	. . NUT	4	
	AN960D416	. . WASHER	4	
-14	AN4-5A	. . BOLT	4	
		----*----		
-15	AN210-6A	. . PULLEY	2	
		(ATTACHING PARTS)		
	AN320-6	. . NUT	2	
	AN960D616	. . WASHER	2	
-16	AN26-21	. . BOLT	2	
		----*----		
-17	4192954	. . GUARD, Aileron pulley (18355)	2	
		(ATTACHING PARTS)		
-18	MS20365-428	. . NUT	2	
-19	AN960D416	. . WASHER	2	
-20	124682-4S10-031	. . WASHER (18355)	2	
-21	NAS43DD4-10	. . SPACER	2	
-22	AN4-7A	. . BOLT	2	
	MS20365-1032	. . NUT	2	
	AN960D10	. . WASHER	2	
-23	AN520-10-12	. . SCREW	2	
		----*----		
	5128639	. . TUBE ASSY, Aileron differential drum torque (18355)	1	
		(ATTACHING PARTS)		
-24	AN310-6	. . NUT	1	
	AN960C616	. . WASHER	1	
		----*----		
-25	5128641	. . . TUBE ASSY, Aileron torque (18355)	1	

FIG. AND INDEX NO.	PART NUMBER	DESCRIPTION 1 2 3 4 5 6 7	UNITS PER ASSY	USABLE ON CODE
65-26	4151131	. . . GUARD, Aileron torque tube, forward drum (18355)	1	
-27	5128640	. . . DRUM, Aileron differential (18355)	1	
		(ATTACHING PARTS)		
	MS20364-1032	. . . NUT	2	
	AN975-3	. . . WASHER	2	
-28	AN386-1-20A	. . . PIN	2	
		----*----		
-29	5128632	. . . DRUM ASSY, Aileron differential, aft (18355)	1	
	116500-86020	. . . . BUSHING, Steel (press to fit)	1	
		(ATTACHING PARTS)		
	MS20364-1032	. . . NUT	2	
	AN975-3	. . . WASHER	2	
-30	AN386-1-18A	. . . PIN	1	
		----*----		
-31	1128834	. . . STRIP, Aileron diff, drum control lock, LH (18355)	1	
		(ATTACHING PARTS)		
-32	AN507-832-8	. . . SCREW	2	
		----*----		
-33	1128834-1	. . . STRIP, Aileron diff, drum control lock, RH (18355)	1	
		(ATTACHING PARTS)		
-34	AN507-832-6	. . . SCREW	2	
		----*----		
-35	4207238	. . GUARD ASSY, Aileron forward drum (18355)	1	
		(ATTACHING PARTS)		
	A1778-8Z1	. . NUT (78553)	4	
-36	AN530-8-10	. . SCREW	4	
		----*----		
-37	4207239	. . BRACKET ASSY, Aileron forward drum guard support (18355)	1	
		(ATTACHING PARTS)		
-38	AN3-6A	. . BOLT	3	
	AN970-3	. . WASHER	3	
		----*----		
-39	1151019	. . PLATE, Aileron torque tube, fwd bearing retainer (18355)	1	
	1151018	. . HOUSING ASSY, Aileron torque tube, fwd bearing (18355)	1	
		(ATTACHING PARTS)		
	MS20365-1032	. . NUT	4	
	AN960D10	. . WASHER	4	
-40	AN3-5A	. . BOLT	4	
		----*----		
-41	1151018-2	. . . HOUSING (18355)	1	
-42	AN201K8A	. . . BEARING	1	
-43	5150287	. . BRACKET ASSY, Aileron torque tube, aft support (18355)	1	
		(ATTACHING PARTS)		
	MS20365-1032	. . NUT	4	
	AN960D10	. . WASHER	4	
-44	AN3-5A	. . BOLT	4	
		----*----		
-45	5150288	. . . SUPPORT ASSY, Aileron torque tube, aft bearing control lock (18355)	1	
-46	AN201K8A	. . . BEARING	1	
-47	1143173	. . . BUSHING ASSY, Aileron torque tube, aft bearing control lock (18355)	1	
-48	S504	. . . . BEARING (70417)	1	
-49	4151138	. . . GUARD, Aileron torque tube, aft drum (18355)	1	
		(ATTACHING PARTS)		
-50	AN3-3A	. . . BOLT	4	
		----*----		
-51	1151024	. . PIN, Aileron control lock (18355)	1	
-52	1151023	. . SPRING, Aileron control lock, engaging (18355)	1	
-53	1125982	. . SPRING, Control surface lock, compression (18355)	1	
-54	1151022	. . CRANK, Aileron control lock pin, driving (18355)	1	
-55	1151025	. . BUSHING, Aileron control lock pin, driving (18355)	1	

FIG. AND INDEX NO.	PART NUMBER	DESCRIPTION 1 2 3 4 5 6 7	UNITS PER ASSY	USABLE ON CODE
65-		(ATTACHING PARTS)		
-56	MS20392-41	. . PIN	1	
	AN960D10	. . WASHER	1	
		----*----		
-57	146229-302	. . ROD, Aileron control (18355)	1	
-58	AN486-3	. . CLEVIS	2	
		(ATTACHING PARTS)		
	AN316-4R	. . NUT	2	
-59	MS20392-17	. . PIN	2	
	AN960-10L	. . WASHER	2	
		----*----		
	2150834	. . CRANK ASSY, Aileron control lock (18355)	1	
		(ATTACHING PARTS)		
	AN320-5	. . NUT	1	
	AN960-516	. . WASHER	1	
-60	AN5-23	. . BOLT	1	
		----*----		
-61	2150834-2	. . . CRANK, Aileron control lock (18355)	1	
-62	A403-6	. . . BEARING (70417)	1	
-63	2208752	. . GUARD, Aileron cable (18355)	1	
		(ATTACHING PARTS)		
-64	MS20365-1032	. . NUT	1	
-65	AN960D10	. . WASHER	1	
		----*----		
-66	AN210-6A	. . PULLEY	2	
		(ATTACHING PARTS)		
	AN320-6	. . NUT	2	
-67	NAS43DD6-62	. . SPACER	1	
-68	NAS43DD6-24	. . SPACER	1	
-69	NAS43DD6-14	. . SPACER	1	
-70	AN26-36	. . BOLT	2	
		----*----		
-71	143358-129	. . PIN, Pulley guard (18355)	2	
-72	NAS427K22	. . PIN	2	
-73	2150835	. . BRACKET ASSY, Control lock pulley (18355)	1	
-74	AN210-2A	. . PULLEY	2	
		(ATTACHING PARTS)		
	AN320-3	. . NUT	1	
	AN960D10	. . WASHER	1	
-75	AN23-18	. . BOLT	1	
		----*----		

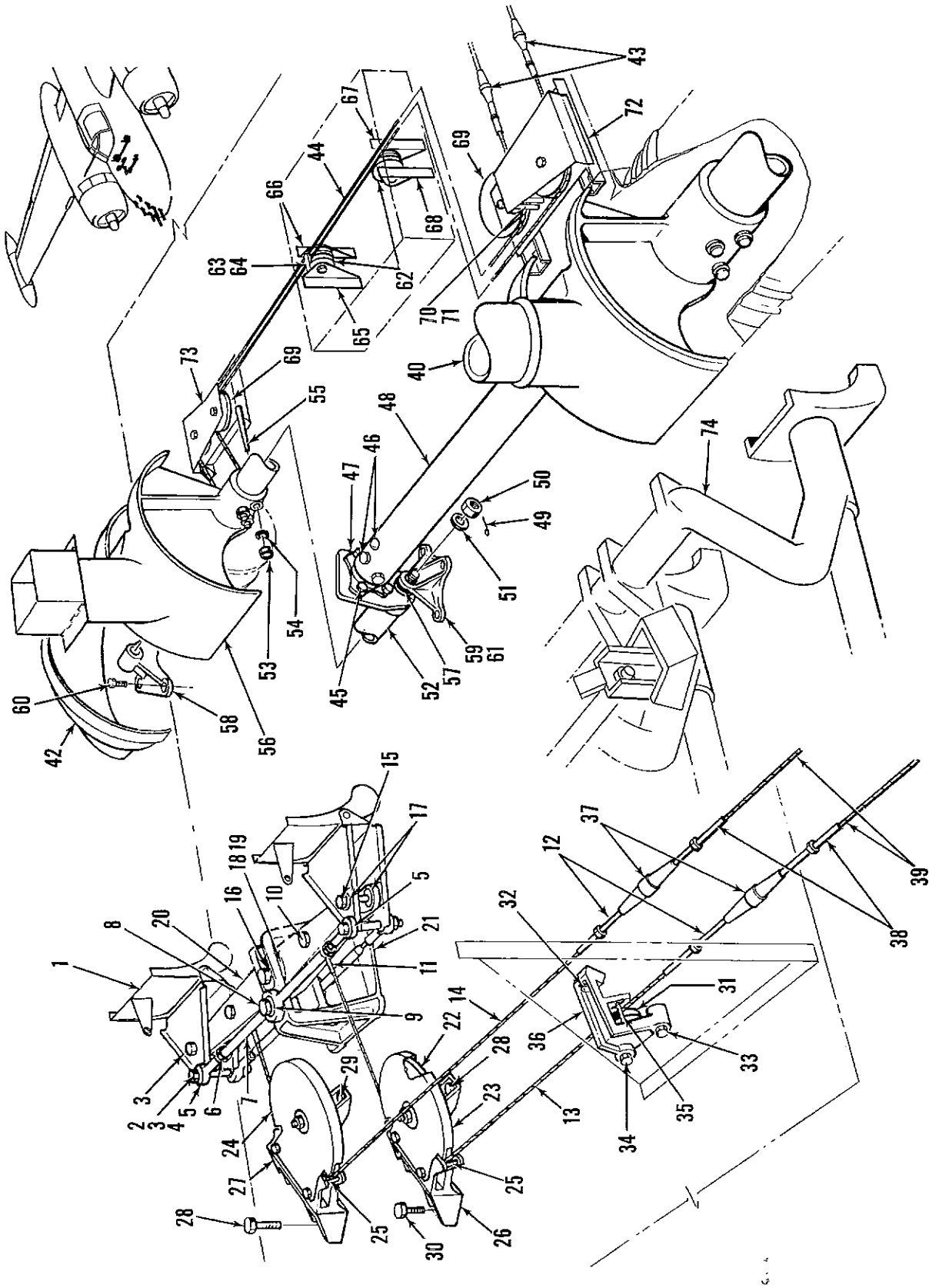

Figure 66. Dual Controls Installation

FIG. AND INDEX NO.	PART NUMBER	DESCRIPTION 1 2 3 4 5 6 7	UNITS PER ASSY	USABLE ON CODE
66-	26-9239	DUAL CONTROLS INSTL (for NHA see fig. 64)	REF	
-1	26-9243	. BRAKE MECHANISM INSTL, Co-pilot's (for details see fig. 68)	NP	
-2	MS24665-2-4	. PIN	2	
-3	AN320-4	. NUT	2	
	AN960-416L	. WASHER	4	
-4	AN4-45	. BOLT	2	
-5	RE4F5	. ROD END (86174)	4	
-6	AN316-5R	. NUT	4	
-7	26-9205-1	. ROD ASSY, Pilot's rudder pedal	2	
		(ATTACHING PARTS)		
	MS24665-2-4	. PIN	1	
	AN320-5	. NUT	1	
	AN960D516L	. WASHER	2	
-8	AN5-45	. BOLT	1	
		----*----		
-9	AN200KS5	. . BEARING	1	
	26-9226-8	. CABLE ASSY, Co-pilot's rudder control	1	
	26-9226-10	. CABLE ASSY, Co-pilot's rudder control	1	
		(ATTACHING PARTS)		
	MS24665-2-4	. PIN	2	
	AN320-4	. NUT	2	
	AN960D416L	. WASHER	4	
-10	AN24-21	. BOLT	2	
		----*----		
-11	2031138-4	. . BEARING, Cable end (18355)	1	
-12	AN669S5RH	. . TERMINAL	1	
-13	26-9226-9	. . CABLE, 5/32 dia (used on 26-9226-8)	1	
-14	26-9226-11	. . CABLE, 5/32 dia (used on 26-9226-10)	1	
	26-9210-1	. ARM ASSY, Dual control rudder pedal	1	
		(ATTACHING PARTS)		
	MS24665-2-4	. PIN	3	
	AN320-4	. NUT	2	
	AN960D416L	. WASHER	4	
-15	AN24-36	. BOLT	2	
	AN320-5	. NUT	1	
	AN960D516L	. WASHER	2	
-16	AN25-54	. BOLT	1	
		----*----		
-17	AN201K4A	. . BEARING	4	
-18	AN201K8A	. . BEARING	2	
-19	26-9228	. . SPACER	1	
-20	26-9210-2	. . ARM	1	
-21	26-9216-1	. SUPPORT, Dual control rudder bar	1	
		(ATTACHING PARTS)		
	MS20365-428	. NUT	4	
	AN960D416L	. WASHER	8	
	AN4-7A	. BOLT	4	
		----*----		
-22	AN210-6A	. PULLEY	2	
		(ATTACHING PARTS)		
	MS24665-3-5	. PIN	2	
	AN320-6	. NUT	2	
	AN960D616L	. WASHER	2	
	AN26-25	. BOLT	4	
		----*----		
-23	26-9239-19	. GUARD, Pulley	1	
-24	26-9239-21	. GUARD, Pulley	1	
		(ATTACHING PARTS FOR INDEX 23 AND 24)		
	MS20364-1032	. NUT	4	
	AN960-10	. WASHER	8	
	AN3-5A	. BOLT	4	
		----*----		
-25	143358-110A	. PIN	4	
-26	26-9218-1	. BRACKET, Dual rudder control sta 15 pulley	1	
-27	26-9219-1	. BRACKET, Dual rudder control sta 16 pulley	1	
		(ATTACHING PARTS)		
	MS20365-428	. NUT	6	
	AN960-416L	. WASHER	12	
-28	AN4-7A	. BOLT	3	
-29	AN4-10A	. BOLT	2	
-30	AN4-11A	. BOLT	1	
		----*----		

FIG. AND INDEX NO.	PART NUMBER	DESCRIPTION 1 2 3 4 5 6 7	UNITS PER ASSY	USABLE ON CODE
66-31	AN210-3A	. PULLEY	1	
		(ATTACHING PARTS)		
	MS24665-2-4	. PIN	1	
	AN320-4	. NUT	1	
	AN960-416L	. WASHER	2	
	AN24-28	. BOLT	1	
		----*----		
	26-8401-2	. BRACKET ASSY, Dual controls rudder idler pulley	1	
		(ATTACHING PARTS)		
	MS20365-428	. NUT	3	
	AN960-416L	. WASHER	6	
-32	AN4-12A	. BOLT	1	
-33	AN4-14A	. BOLT	1	
-34	AN4-15A	. BOLT	1	
		----*----		
-35	146142-187-104	. . PIN (18355)	1	
-36	26-8401-3	. . BRACKET	1	
-37	AN155-32S	. BARREL	2	
	26-9226-4	. CABLE ASSY, Co-pilot's rudder control	1	
-38	AN669S5LH	. . TERMINAL	2	
-39	26-9226-5	. . CABLE, 5/32 dia	1	
-40	26-9239-83	. CONTROL COLUMN INSTL, Pilot's (for details see fig. 69)	1	
-41	26-9215-1	. COVER ASSY, Control column torque tube, LH	1	
-42	26-9215-2	. COVER ASSY, Control column torque tube, RH	1	
	26-9226-6	. CABLE ASSY, Co-pilot's aileron control	1	
-43	AN669S5LH	. . TERMINAL	2	
-44	26-9226-3	. . CABLE	1	
	26-9231-2	. TUBE ASSY, Dual controls connecting	1	
		(ATTACHING PARTS)		
	MS20365-428	. NUT	8	
	AN960-416L	. WASHER	16	
-45	AN4-12A	. BOLT	8	
		----*----		
	MS20364-1032	. . NUT	6	
	AN975-3	. . WASHER	6	
-46	AN386-2-17A	. . PIN	6	
-47	26-9231-3	. . DISCONNECT	2	
-48	26-9231-4	. . TUBE	1	
-49	MS24665-2-3	. PIN	1	
-50	AN320-6	. NUT	1	
-51	AN960D616L	. WASHER	1	
-52	26-9230-2	. SHAFT ASSY, Dual control column disconnect	1	
		(ATTACHING PARTS, METHOD I) (SEE ALT METHOD II)		
-53	MS20364-524	. NUT	3	
-54	AN975-5	. WASHER	3	
-55	AN386-4-22A	. PIN	3	
		(ATTACHING PARTS, METHOD II) (SEE ALT METHOD I)		
	MS24665-3-4	. PIN	3	
	AN320-8	. NUT	3	
	AN960D816L	. WASHER	6	
	AN28-48	. BOLT	3	
		----*----		
-56	26-9238-1	. CONTROL COLUMN INSTL, Co-pilot's quick disconnect (for details see fig. 70)	1	
		(ATTACHING PARTS)		
	MS24665-3-5	. PIN	1	
	AN320-6	. NUT	1	
	AN960D616L	. WASHER	1	
	AN26-34	. BOLT	1	
		----*----		
-57	AN201K6A	. BEARING	1	
-58	26-9206	. SUPPORT, Dual controls outbd bearing	1	
-59	26-9207	. SUPPORT, Dual controls inbd bearing	1	
		(ATTACHING PARTS FOR INDEX 58 AND 59)		
	MS20365-1032	. NUT	6	
	AN960-10L	. WASHER	12	
-60	AN3-10A	. BOLT (Used with 26-9206)	3	
-61	AN3-7A	. BOLT (Used with 26-9207)	3	
		----*----		

FIG. AND INDEX NO.	PART NUMBER	DESCRIPTION 1 2 3 4 5 6 7	UNITS PER ASSY	USABLE ON CODE
66-62	AN210-3B	. PULLEY	4	
		(ATTACHING PARTS)		
	MS24665-2-2	. PIN	2	
	AN320-5	. NUT	2	
	AN960-516L	. WASHER	4	
	AN5-20	. BOLT	2	
		----*----		
-63	MS24665-2-2	. PIN	4	
-64	AN392-21	. PIN	4	
-65	26-1054-1	. BRACKET, Aileron pulley, fwd tunnel	1	
-66	26-1054-2	. BRACKET, Aileron pulley, fwd tunnel	1	
-67	26-1054-3	. BRACKET, Aileron pulley, fwd tunnel	1	
-68	26-1054-4	. BRACKET, Aileron pulley, fwd tunnel	1	
		(ATTACHING PARTS)		
	MS20365-1032	. NUT	12	
	AN960-10L	. WASHER	24	
	AN3-5A	. BOLT	12	
		----*----		
-69	AN210-4B	. PULLEY	4	
		(ATTACHING PARTS)		
	MS24665-2-2	. PIN	4	
	AN320-5	. NUT	4	
	AN960-516L	. WASHER	8	
	AN5-12	. BOLT	4	
		----*----		
-70	MS24665-2-2	. PIN	4	
-71	AN392-25	. PIN	4	
-72	26-9259	. BRACKET, Pilot's aileron pulley	1	
-73	26-9236	. BRACKET, Co-pilot's aileron pulley	1	
		(ATTACHING PARTS FOR INDEX 67 AND 68)		
	MS20365-1032	. NUT	8	
	AN960-10	. WASHER	16	
	AN3-5A	. BOLT	8	
		----*----		
-74	26-9239-85	. RUDDER PEDAL AND BRAKE INSTL, Pilot's (for details see fig. 67)	NP	

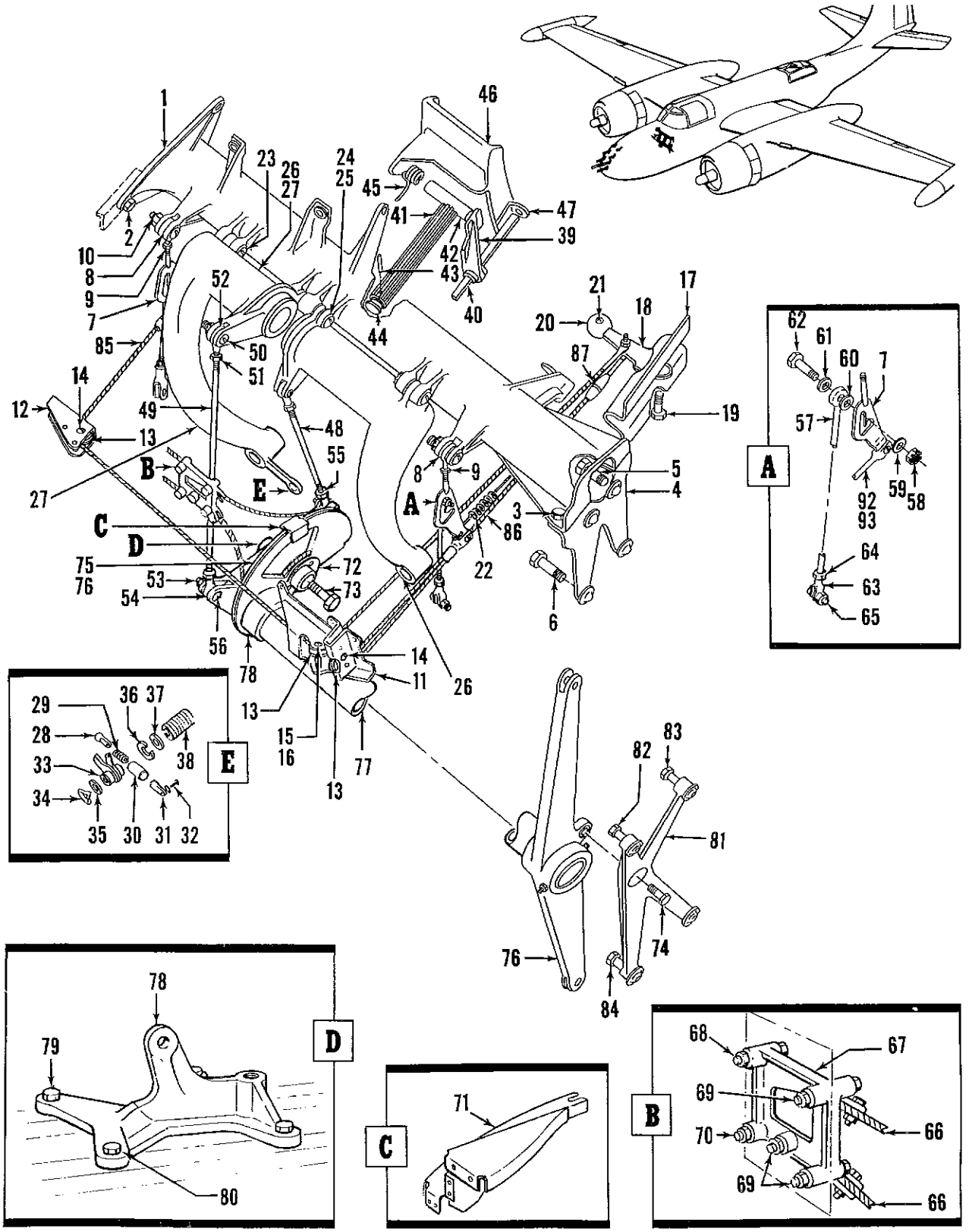

Figure 67. Pilot's Rudder Pedal and Brake Installation

FIG. AND INDEX NO.	PART NUMBER	DESCRIPTION 1 2 3 4 5 6 7	UNITS PER ASSY	USABLE ON CODE
67-	26-9239-85	RUDDER PEDAL AND BRAKE INSTL, Pilot's (altered from 5153219 (18355)) (for NHA see fig. 66)	REF	
-1	5205203	. TUBE, Pilot's rudder pedal support (18355)	1	
		(ATTACHING PARTS)		
	MS20365-428	. NUT	2	
	AN960D416	. WASHER	6	
-2	AN4-7A	. BOLT	2	
-3	AN3-6A	. BOLT	2	
		----*----		
-4	4123627	. FITTING, Pilot's rudder pedal tube (18355)	1	
		(ATTACHING PARTS)		
-5	AN3-7A	. BOLT	2	
-6	AN3-10A	. BOLT	2	
	AN960D10	. WASHER	4	
		----*----		
-7	2123274	. PLATE, Parking brake stop (18355)	2	
-8	REB3N2	. END, Rod (86174)	2	
-9	AN316-5R	. NUT	2	
		(ATTACHING PARTS)		
	AN320-3	. NUT	2	
	AN960D10	. WASHER	2	
-10	AN23-23	. BOLT	2	
		----*----		
-11	5193058	. BRACKET ASSY, Parking brake cable (18355)	1	
-12	2155169	. BRACKET ASSY, Parking brake pulley, RH (18355)	1	
-13	AN210-1A	. PULLEY	3	
		(ATTACHING PARTS)		
	AN320-3	. NUT	3	
	AN960-10	. WASHER	3	
-14	AN23-10	. BOLT	2	
-15	AN23-31	. BOLT	1	
		----*----		
-16	NAS43DD3-210	. SPACER	1	
	4192888	. BRACKET ASSY, Parking brake lever (18355)	1	
-17	4192888-2	. . BRACKET, Parking brake lever (18355)	1	
-18	1192363	. . LEVER ASSY, Parking brake cable (18355)	1	
		(ATTACHING PARTS)		
	AN320-3	. . NUT	1	
	AN960D10	. . WASHER	1	
	2033900-45028-014	. . SPACER	1	
-19	AN23-14	. . BOLT	1	
		----*----		
-20	NAS198B093	. KNOB ASSY	1	
		(ATTACHING PARTS)		
-21	1067507	. SCREW, Special oval head, 10-32 (18355)	1	
		----*----		
-22	1122871	. SPRING, Parking brake release (18355)	1	
	5209070	. PEDAL ASSY, Pilot's rudder and brake LH (18355)	1	
	5209070-1	. PEDAL ASSY, Pilot's rudder and brake RH (18355)	1	
		(ATTACHING PARTS)		
	AN310-4	. NUT	3	
	AN960D416	. WASHER	3	
-23	AN4-16	. BOLT	2	
-24	AN4-31	. BOLT	1	
-25	143908-009R104-034	. WASHER	4	
		----*----		
-26	5205196	. . ARM ASSY, Rudder pedal, LH (18355)	1	
-27	5205197	. . ARM ASSY, Rudder pedal, RH (18355)	1	
	AN200KS3	. . BEARING	2	
-28	1024895	. . PIN, Rudder pedal lock (18355)	1	
-29	1024892	. . SPRING, Rudder pedal lock (18355)	1	
-30	1024891	. . GUIDE, Rudder pedal lock release (18355)	1	
-31	1125431	. . CLEVIS, Rudder pedal adjustment (18355)	1	
		(ATTACHING PARTS)		
-32	MS20392-9	. . PIN	1	
	AN960C6	. . WASHER	1	
		----*----		

FIG. AND INDEX NO.	PART NUMBER	DESCRIPTION 1 2 3 4 5 6 7	UNITS PER ASSY	USABLE ON CODE
67-33	2125428	. . ARM, Rudder pedal adjustment (18355)	1	
-34	1225432	. . SPRING, Rudder pedal adjustment lock (18355)	1	
-35	143908-026D102-064	. . WASHER (18355)	1	
-36	1193343	. . SPACER, Rudder pedal and brake, split (18355)	1	
-37	143908-021D106-051	. . WASHER (18355)	1	
-38	1122874	. . SPRING, Rudder pedal adjustment (18355)	1	
-39	2209072	. . LEVER, Rudder pedal adjustment, LH (18355)	1	
	2209072-1	. . LEVER, Rudder pedal adjustment, RH (18355)	1	
-40	2209074	. . BUSHING ASSY, Rudder pedal adjustment (18355)	1	
	2123277	. . SPLINE ASSY, Rudder pedal, LH (18355)	1	
	2123277-1	. . SPLINE ASSY, Rudder pedal, RH (18355)	1	
-41	2123276	. . . SPLINE, Rudder pedal (18355)	1	
-42	2125249	. . . HEAD, Rudder pedal cross (18355)	1	
-43	146142-127-101	. . . PIN (18355)	1	
-44	1125442	. . STOP, Rudder pedal (18355)	1	
-45	1125430	. . SPRING, Rudder pedal torque, LH (18355)	1	
	1125430-1	. . SPRING, Rudder pedal torque, RH (18355)	1	
-46	5123590	. . REST ASSY, Rudder foot pedal, LH (18355)	1	
	5123590-1	. . REST ASSY, Rudder foot pedal, RH (18355)	1	
-47	2209073	. . SUPPORT, Rudder pedal adjustment (18355)	1	
-48	2085485-1028	. ROD ASSY, Ball bearing, control (18355)	1	
-49	2085485-1328	. ROD ASSY, Ball bearing, control (18355)	1	
		(ATTACHING PARTS)		
	AN320-4	. NUT	2	
	AN960D416	. WASHER	2	
-50	AN24-23	. BOLT	2	
		----*----		
-51	1122861	. END ASSY, Rudder pedal control rod (18355)	2	
-52	AN316-5R	. NUT	2	
-53	RE4F5	. END, Rod (86174)	2	
		(ATTACHING PARTS)		
-54	AN316-5R	. NUT	2	
	AN320-4	. NUT	2	
	AN960D416	. WASHER	2	
-55	AN24-26	. BOLT	1	
-56	AN24-36	. BOLT	1	
		----*----		
-57	219192	. ROD ASSY, Brake pedal control (18355)	2	
		(ATTACHING PARTS)		
-58	AN320-3	. NUT	2	
-59	2033901-6SR187-006	. SPACER (18355)	2	
-60	124682-3S10-062	. WASHER (18355)	2	
-61	AN960D10	. WASHER	2	
-62	AN23-34	. BOLT	2	
		----*----		
-63	AN486-3	. CLEVIS	2	
		(ATTACHING PARTS)		
-64	AN316-4R	. NUT	2	
	AN320-3	. NUT	2	
	AN960-10	. WASHER	2	
-65	AN23-12	. BOLT	2	
		----*----		
-66	AN210-4A	. PULLEY	2	
		(ATTACHING PARTS)		
	MS24665-2-3	. PIN	2	
	AN320-4	. NUT	2	
	AN960D416L	. WASHER	2	
	AN24-27	. BOLT	2	
		----*----		
-67	26-9209-1	. BRACKET ASSY, Sta 10 dual controls rudder pulleys	1	
		(ATTACHING PARTS)		
	MS20365-428	. NUT	4	
	AN960-416L	. WASHER	4	
-68	AN4-21A	. BOLT	1	
-69	AN4-23A	. BOLT	2	
-70	AN4-27A	. BOLT	1	
		----*----		
	146142-187-105	. . PIN (18355)	2	

FIG. AND INDEX NO.	PART NUMBER	DESCRIPTION 1 2 3 4 5 6 7	UNITS PER ASSY	USABLE ON CODE
67-71	26-9239-45	. GUARD, Co-pilot's rudder control cable	1	
		(ATTACHING PARTS)		
	MS20365-1032	. NUT	6	
	AN960-10L	. WASHER	6	
	AN520-10R7	. SCREW	6	
		----*----		
-72	26-9239-53	. RING, Cable retaining	1	
		(ATTACHING PARTS)		
	MS20074-6A	. BOLT	3	
	AN960D416	. WASHER	3	
		----*----		
	26-9239-44	. TORQUE TUBE ASSY, Rudder control	1	
		(ATTACHING PARTS)		
	MS24665-2-4	. PIN	2	
	AN320-4	. NUT	2	
	AN960-416L	. WASHER	2	
-73	AN24-42	. BOLT	1	
-74	AN4-15	. BOLT	1	
		----*----		
-75	26-9211	. . ARM, Sta 16 dual control torque tube	1	
		(ATTACHING PARTS)		
	MS20365-1032	. . NUT	2	
	AN975-3	. . WASHER	2	
	AN386-1-22A	. . PIN	2	
		----*----		
-76	4123630	. . HORN, Rudder control (18355)	1	
		(ATTACHING PARTS)		
	MS20365-1032	. . NUT	2	
	AN975-3	. . WASHER	2	
	AN386-1-20A	. . PIN	2	
		----*----		
-77	26-9214	. . TORQUE TUBE, Pilot's rudder control	1	
-78	26-9208	. SUPPORT ASSY, Dual rudder control torque tube inboard	1	
		(ATTACHING PARTS)		
	MS20365-428	. NUT	4	
	AN960-416L	. WASHER	4	
-79	AN4-10A	. BOLT	2	
-80	AN4-11A	. BOLT	2	
		----*----		
-81	4123629	. SUPPORT, Rudder control torque tube outboard (18355)	1	
		(ATTACHING PARTS)		
-82	AN3-7A	. BOLT	1	
-83	AN3-10A	. BOLT	2	
-84	AN3-11A	. BOLT	1	
	AN960D10	. WASHER	4	
		----*----		
-85	2074407-8-4-5216	. CABLE ASSY, Parking brake (18355)	1	
-86	2074407-8-4-3524	. CABLE ASSY, Parking brake (18355)	1	
-87	MS21251-16S	. TURNBUCKLE BODY	1	
-88	MS21252-16RS	. CLEVIS	1	
		(ATTACHING PARTS)		
	AN320-3	. NUT	1	
	AN960-10	. WASHER	1	
	AN23-10	. BOLT	1	
		----*----		

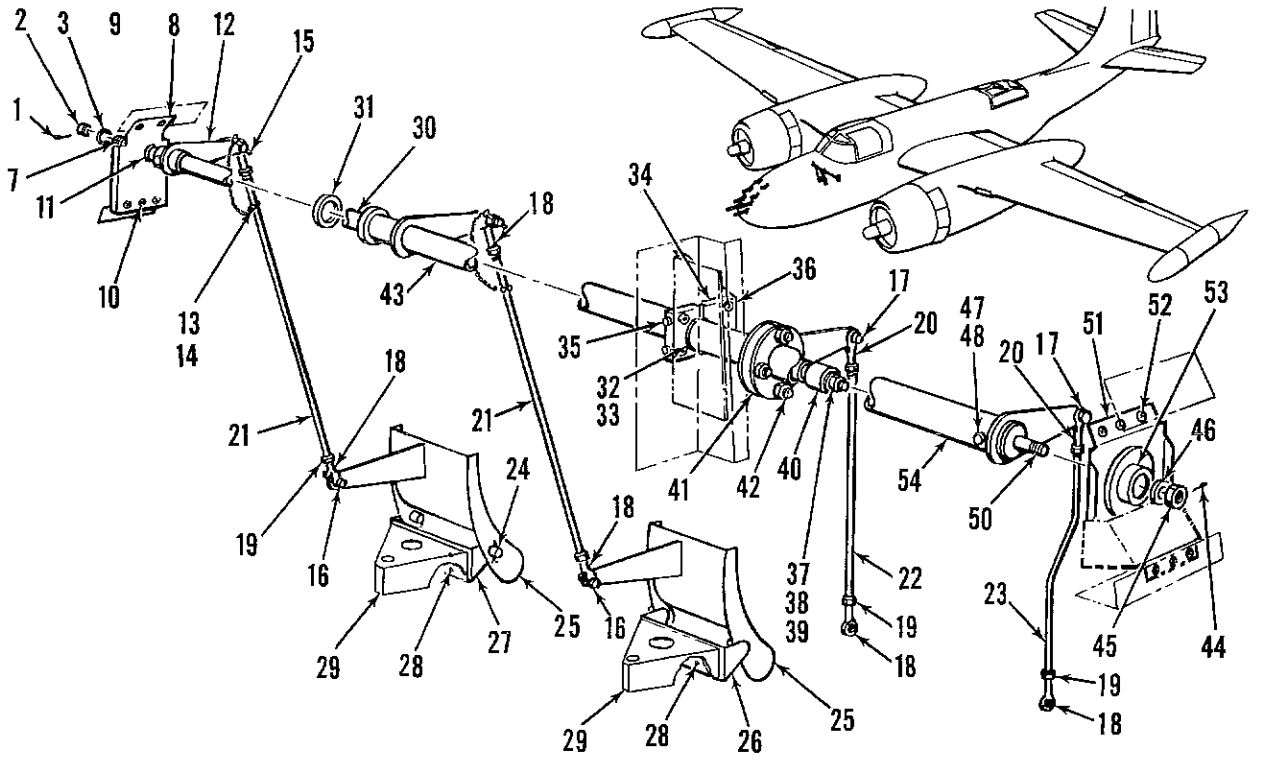

Figure 68. Co-Pilot's Brake Mechanism Installation

FIG. AND INDEX NO.	PART NUMBER	DESCRIPTION 1 2 3 4 5 6 7	UNITS PER ASSY	USABLE ON CODE
68-	26-9243	BRAKE MECHANISM INSTL, Co-pilot's (for NHA see fig. 66)	REF	
-1	MS24665-2-10	. PIN	1	
-2	AN310-5	. NUT	1	
-3	AN960-516	. WASHER	1	
-4	MS20365-1032	. NUT	1	
-5	AN975-3	. WASHER	1	
-6	AN386-1-8A	. PIN	1	
-7	211	. FITTING	2	
-8	26-9244	. BRACKET ASSY, Co-pilot's brake mechanism (riveted)	1	
		(ATTACHING PARTS)		
	MS20365-1032	. NUT	5	
	AN960D10L	. WASHER	5	
-9	AN509-10R13	. SCREW	2	
-10	NAS221-10	. SCREW	3	
		----*----		
-11	AN200KS5	. . BEARING	1	
-12	216	. ARM ASSY	1	
	MS35649-632	. NUT	2	
-13	AN515-6-8	. SCREW	2	
-14	BLS3TA0.7S	. PIN, Ball lock (00502)	2	
	26-9249-2	. ROD ASSY, Co-pilot's brake mechanism	2	
	26-9249-4	. ROD ASSY, Co-pilot's brake mechanism	1	
	26-9249-6	. ROD ASSY, Co-pilot's brake mechanism	1	
		(ATTACHING PARTS)		
	MS24665-2-6	. PIN	6	
	AN310-3	. NUT	6	

FIG. AND INDEX NO.	PART NUMBER	DESCRIPTION 1 2 3 4 5 6 7	UNITS PER ASSY	USABLE ON CODE
68-	AN960-10	. WASHER	12	
-15	AN3-10	. BOLT	2	
-16	AN3-13	. BOLT	2	
-17	AN3-6	. BOLT	2	
		----*----		
-18	REB3N3	. . END, Rod (21335) (2 each used on 26-9249-2)	1	
-19	AN316-4R	. . NUT	2	
-20	AN486-4	. . CLEVIS (Used on 26-9249-4 and -6 only)	1	
-21	26-9249-3	. . ROD (Used on 26-9249-2)	1	
-22	26-9249-5	. . ROD (Used on 26-9249-4)	1	
-23	26-9249-7	. . ROD (Used on 26-9249-6)	1	
-24	AN415-2	. PIN	2	
-25	214	. REST ASSY, Rudder pedal foot	2	
-26	26-9248-1	. BRACKET ASSY, Co-pilot's brake mechanism, LH	1	
-27	26-9248-2	. BRACKET ASSY, Co-pilot's brake mechanism, RH	1	
		(ATTACHING PARTS)		
	MS20365-1032	. NUT	6	
	AN960-10	. WASHER	12	
-28	NAS221-11	. SCREW	6	
		----*----		
-29	26-9502-1	. PEDAL ASSY, Co-pilot's rudder	2	
-30	26-9245	. TORQUE TUBE ASSY, Co-pilot's brake mechanism	1	
-31	B540	. BEARING, Ball, annular (86174)	1	
-32	B542	. BEARING, Ball, annular (86174)	1	
-33	221	. BUSHING	1	
-34	213	. BLOCK	2	
		(ATTACHING PARTS)		
	MS20365-1032	. NUT	6	
	AN960D10	. WASHER	6	
-35	AN3-31A	. BOLT	2	
-36	NAS221-14	. SCREW	4	
		----*----		
-37	MS24665-2-10	. PIN	1	
-38	AN310-5	. NUT	1	
-39	224	. WASHER	1	
-40	AR8	. BEARING, Roller (60380)	1	
-41	217	. SPACER	1	
		(ATTACHING PARTS)		
	MS20365-1032	. NUT	3	
-42	NAS221-17	. SCREW	3	
		----*----		
-43	219	. TORQUE TUBE ASSY	1	
-44	MS24665-2-10	. PIN	1	
-45	MS20365-524	. NUT	1	
-46	AN960-516	. WASHER	1	
-47	MS20365-1032	. NUT	1	
-48	AN975-3	. WASHER	1	
-49	AN386-1-9A	. PIN	1	
-50	223	. FITTING	1	
		(ATTACHING PARTS		
-51	26-9247	. BRACKET ASSY, Co-pilot's brake mechanism	1	
-52	AN509-10R10	. SCREW	3	
		----*----		
-53	AN200KS5	. BEARING	1	
-54	26-9246	. TORQUE TUBE ASSY, Co-pilot's brake mechanism	1	

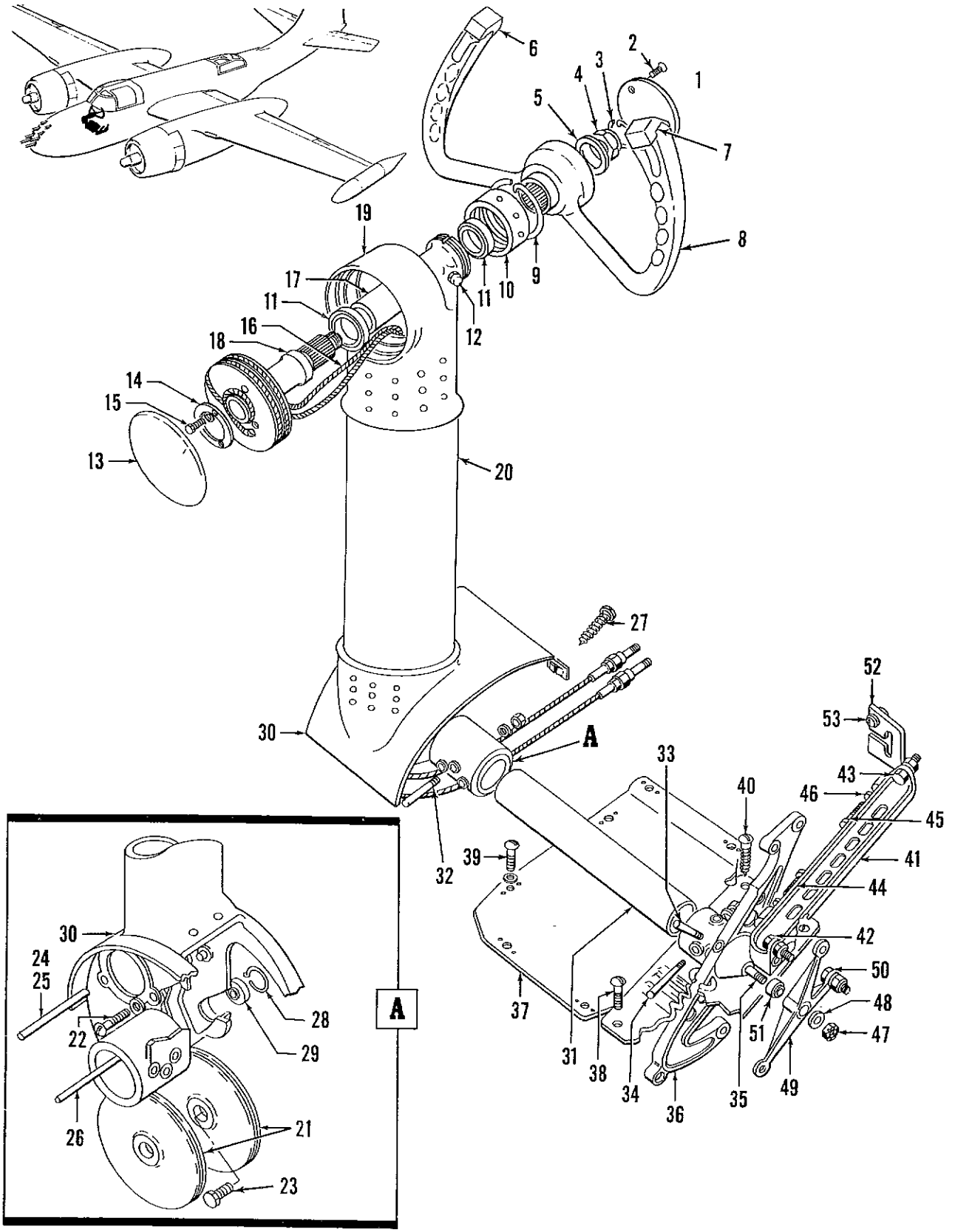

Figure 69. Pilot's Control Column Installation

FIG. AND INDEX NO.	PART NUMBER	DESCRIPTION 1 2 3 4 5 6 7	UNITS PER ASSY	USABLE ON CODE
69-	26-9239-83	CONTROL COLUMN INSTL, Pilot's (altered from 5122215 (18355)) .... (for NHA see fig. 66)	REF	
	26-9239-87	. CONTROL COLUMN ASSY, Pilot's (altered from 5122217 (18355)) . . .	1	
-1	26-9239-66	. . COVER, Control column wheel hub . . . . . (ATTACHING PARTS)	1	
-2	AN507-632R8	. . SCREW . . . . . ----*----	2	
	26-9271-1	. . CONTROL WHEEL ASSY, Pilot's . . . . . (ATTACHING PARTS)	1	
-3	AN996-16	. . RING	1	
-4	1127658	. . NUT, Pilot's control wheel attaching (18355)	1	
-5	AN960D1416	. . WASHER . . . . . ----*----	1	
-6	26-2639-7	. . SWITCH HOUSING, Pilot's control wheel	1	
-7	26-2639-9	. . SWITCH HOUSING, Pilot's control wheel . . . . . (ATTACHING PARTS)	1	
	AN507-832R8	. . SCREW . . . . . ----*----	4	
-8	QW104	. . WHEEL, Control (A.R. Hardware, Glendale, Calif.)	1	
-9	AN996-32	. . RING	1	
-10	2152266	. . CAP, Control column head, bearing retaining (18355)	1	
-11	A541	. . BEARING, Ball, extra light duty (86174)	2	
-12	NAS2-101A	. . FITTING	1	
-13	1191787	. . COVER, Control column head (18355)	1	
-14	1125495	. . RING, Control column head cable locking (18355) . . . . . (ATTACHING PARTS)	1	
-15	MS20074-6A	. . BOLT	3	
	AN960D416	. . WASHER . . . . . ----*----	3	
-16	26-9226-2	. . CABLE ASSY	1	
-17	1125494	. . SPACER, Control column head bearing (18355)	1	
-18	4123757	. . SHAFT, Control column head aileron pulley (18355)	1	
-19	5125422	. . HEAD, Control column (18355)	1	
-20	4123758	. . POST ASSY, Control column (18355)	1	
-21	AN210-5A	. . PULLEY . . . . . (ATTACHING PARTS)	2	
	MS24665-3-3	. . PIN	2	
	AN320-6	. . NUT	2	
	AN960D616	. . WASHER	2	
-22	AN26-27	. . BOLT	2	
-23	AN26-29	. . BOLT . . . . . ----*----	2	
-24	MS24665-2-2	. . PIN	1	
-25	143358-500	. . PIN (18355)	1	
-26	1127651	. . PIN, Control column aileron pulley guard (18355)	1	
	26-9239-65	. . TORQUE TUBE ASSY	1	
	26-9217-1	. . . HOUSING ASSY, Control column pivot . . . . . (ATTACHING PARTS)	1	
	A1778-8Z1	. . . NUT, Speed (78553)	4	
-27	AN530-8-8	. . . SCREW . . . . . ----*----	4	
-28	2130661-029	. . . . RING, Internal lock (18355)	1	
-29	AN201K6A	. . . . BEARING	1	
-30	26-9217-2	. . . . HOUSING	1	
-31	26-9232	. . . TUBE, Torque . . . . . (ATTACHING PARTS)	1	
	MS20364-524	. . . NUT	3	
	AN975-5	. . . WASHER	3	
-32	AN386-4-26A	. . . PIN	3	
	MS20364-428	. . . NUT	3	
	AN975-4	. . . WASHER	3	
-33	AN386-3-20A	. . . PIN	1	
-34	AN386-3-22A	. . . PIN . . . . . ----*----	2	
	5125655	. . . HORN ASSY, Control column elevator (18355)	1	
-35	1125925	. . . . STUD, Bearing attaching, outed (18355)	1	
-36	5125655-2	. . . . HORN (18355)	1	

FIG. AND INDEX NO.	PART NUMBER	DESCRIPTION 1 2 3 4 5 6 7	UNITS PER ASSY	USABLE ON CODE
69-37	5154698	. . SEAL ASSY, Cockpit elevator horn (18355)	1	
		(ATTACHING PARTS)		
	A1881-8Z	. . NUT, Speed (78553)	5	
-38	AN515-8-8	. . SCREW	2	
-39	AN515-8-10	. . SCREW	3	
-40	AN530-8-10	. . SCREW	5	
		----*----		
-41	4123776	. . STOP, Control column elevator horn (18355)	1	
		(ATTACHING PARTS)		
	MS20365-1032	. . NUT	5	
	AN960D10	. . WASHER	5	
-42	AN3-5A	. . BOLT	3	
-43	AN3-6A	. . BOLT	2	
		----*----		
-44	110242-5-17H	. . BOLT, Special, full thread (18355)	1	
-45	110242-5-15H	. . BOLT, Special, full thread (18355)	1	
-46	AN316-5R	. . NUT	2	
-47	AN320-6	. . NUT	1	
-48	AN960-616	. . WASHER	1	
-49	4123795	. . SUPPORT, Control column bearing, outbd (18355)	1	
		(ATTACHING PARTS)		
	MS20365-428	. . NUT	3	
	AN960D416	. . WASHER	3	
-50	AN4-10A	. . BOLT	3	
		----*----		
-51	AN201K6A	. . . BEARING	1	
-52	1127644	. . FAIRLEAD, Flight control (18355)	1	
		(ATTACHING PARTS)		
-53	A1778-8Z1	. . NUT, Speed (78553)	2	
	AN960D8	. . WASHER	2	
	AN530-8-10	. . SCREW	2	
		----*----		

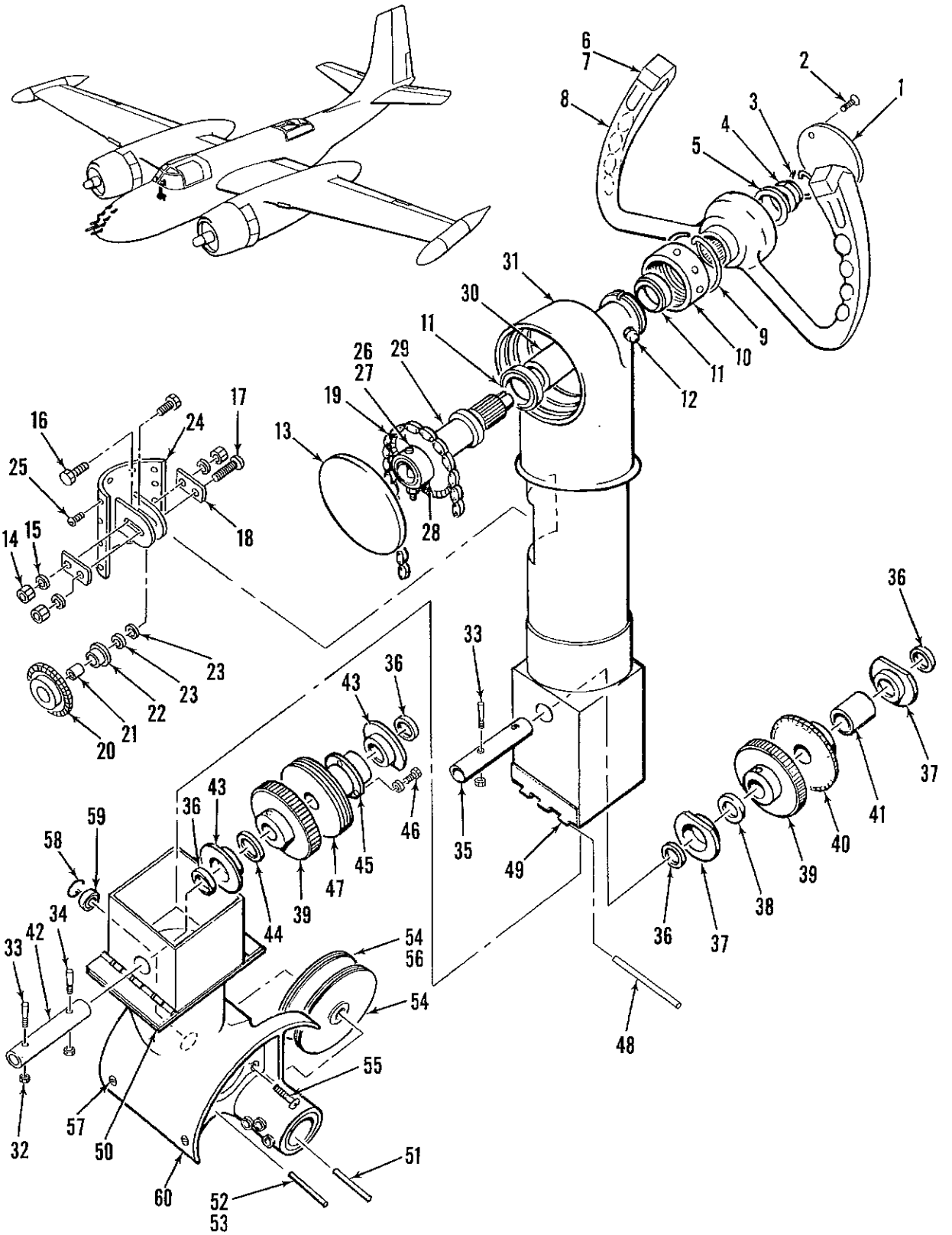

Figure 70. Co-Pilot's Quick Disconnect Control Column Installation

FIG. AND INDEX NO.	PART NUMBER	DESCRIPTION 1 2 3 4 5 6 7	UNITS PER ASSY	USABLE ON CODE
70-	26-9238-1	CONTROL COLUMN INSTL, Quick disconnect, co-pilot's (for NHA see fig. 66)	REF	
	26-9238-6	. CONTROL COLUMN ASSY, Co-pilot's (altered from 5122217 (18355))	1	
-1	26-9239-66	. . COVER, Control column wheel hub (ATTACHING PARTS)	1	
-2	AN507-632R8	. . SCREW ----*----	2	
	26-9271-3	. . CONTROL WHEEL ASSY, Co-pilot's (ATTACHING PARTS)	1	
-3	AN996-16	. . RING	1	
-4	1127658	. . NUT	1	
-5	AN960D1416	. . WASHER ----*----	1	
-6	QX451	. . . NUT (A.R. Hardware, Glendale, Calif.)	2	
-7	QX395	. . . PLUG (A.R. Hardware, Glendale, Calif.) (ATTACHING PARTS)	2	
	AN507-832R8	. . . SCREW ----*----	4	
-8	QW104	. . . WHEEL, Control (A.R. Hardware, Glendale, Calif.)	1	
-9	AN996-32	. . RING	1	
-10	2152666	. . CAP, Control column head, bearing retaining (18355)	1	
-11	A541	. . BEARING, Ball, extra light duty (86174)	2	
-12	NAS2-101A	. . FITTING	1	
-13	1191787	. . COVER, Control column head (18355)	1	
-14	MS20365-1032	. . NUT	3	
-15	AN960-10	. . WASHER	3	
-16	AN3-4A	. . BOLT	2	
-17	NAS221-18	. . SCREW	1	
-18	26-9238-5	. . LOCK	2	
-19	NO. 35	. . CHAIN, Cable, plate link (71041)	1	
-20	26-9240-7	. . SPROCKET (Altered from KSA12 (71041))	1	
-21	NAS537-3-50	. . BUSHING	1	
-22	26-9240-11	. . BEARING, Sleeve (altered from FB58-4 (71041))	1	
-23	AN960-10L	. . WASHER (Used as shim)	AR	
-24	26-9237-2	. . BRACKET ASSY (Welded) (ATTACHING PARTS)	1	
-25	NAS220-7	. . SCREW ----*----	12	
-26	MS20365-1032	. . NUT	1	
-27	AN386-1-12	. . PIN	1	
-28	26-9240-8	. . SPROCKET (Altered from KSA23 (71041))	1	
-29	26-9525-1	. . SHAFT, Control column head, aileron	1	
-30	1125494	. . SPACER, Control column head bearing (18355)	1	
-31	5125422	. . HEAD, Control column (18355)	1	
-32	MS20365-1032	. . NUT	4	
-33	AN386-1-10	. . PIN	3	
-34	AN386-1-8	. . PIN	1	
-35	26-9240-10	. . SHAFT	1	
-36	B539	. . BEARING, Ball (86174)	4	
-37	26-9240-3	. . HOUSING, Bearing	2	
-38	26-9238-3	. . SPACER, Sleeve	1	
-39	26-9258-1	. . GEAR, Spur	2	
-40	26-9240-6	. . SPROCKET (Altered from KSA23 (71041))	1	
-41	26-9238-4	. . SPACER, Sleeve	1	
-42	26-9240-9	. . SHAFT	1	
-43	26-9240-2	. . HOUSING, Bearing	2	
-44	26-9238-2	. . SPACER, Sleeve	1	
-45	26-9239-53	. . RING, Retaining (ATTACHING PARTS)	1	
-46	AN74A-6	. . BOLT	3	
	AN960D1416	. . WASHER ----*----	3	
-47	26-9240-4	. . SHAFT, Pulley (Altered from 4123757 (18355))	1	
-48	AN253-3-12	. . PIN	2	
-49	AN257YC4	. . HINGE, Half, 3.7 long	2	
-50	AN257XC4	. . HINGE, Half, 3.9 long	2	

FIG. AND INDEX NO.	PART NUMBER	DESCRIPTION 1 2 3 4 5 6 7	UNITS PER ASSY	USABLE ON CODE
70-51	1127651	. . PIN, Control column aileron pulley (18355)	1	
-52	MS24665-2-2	. . PIN	1	
-53	143358-500	. . PIN (18355)	1	
-54	AN210-5A	. . PULLEY	2	
		(ATTACHING PARTS)		
	MS24665-3-3	. . PIN	2	
	AN320-6	. . NUT	2	
	AN960D616	. . WASHER	2	
-55	AN26-27	. . BOLT	1	
-56	AN26-29	. . BOLT	1	
		----*----		
	5125642	. . HOUSING ASSY, Control column pivot (18355)	1	
		(ATTACHING PARTS)		
	A1778-8Z1	. . NUT, Speed (78553)	4	
-57	AN530-8-8	. . SCREW	4	
		----*----		
-58	2130661-029	. . . RING, Internal lock (18355)	1	
-59	AN201K6A	. . . BEARING	1	
-60	5125642-2	. . . HOUSING, Control column pivot (18355)	1	

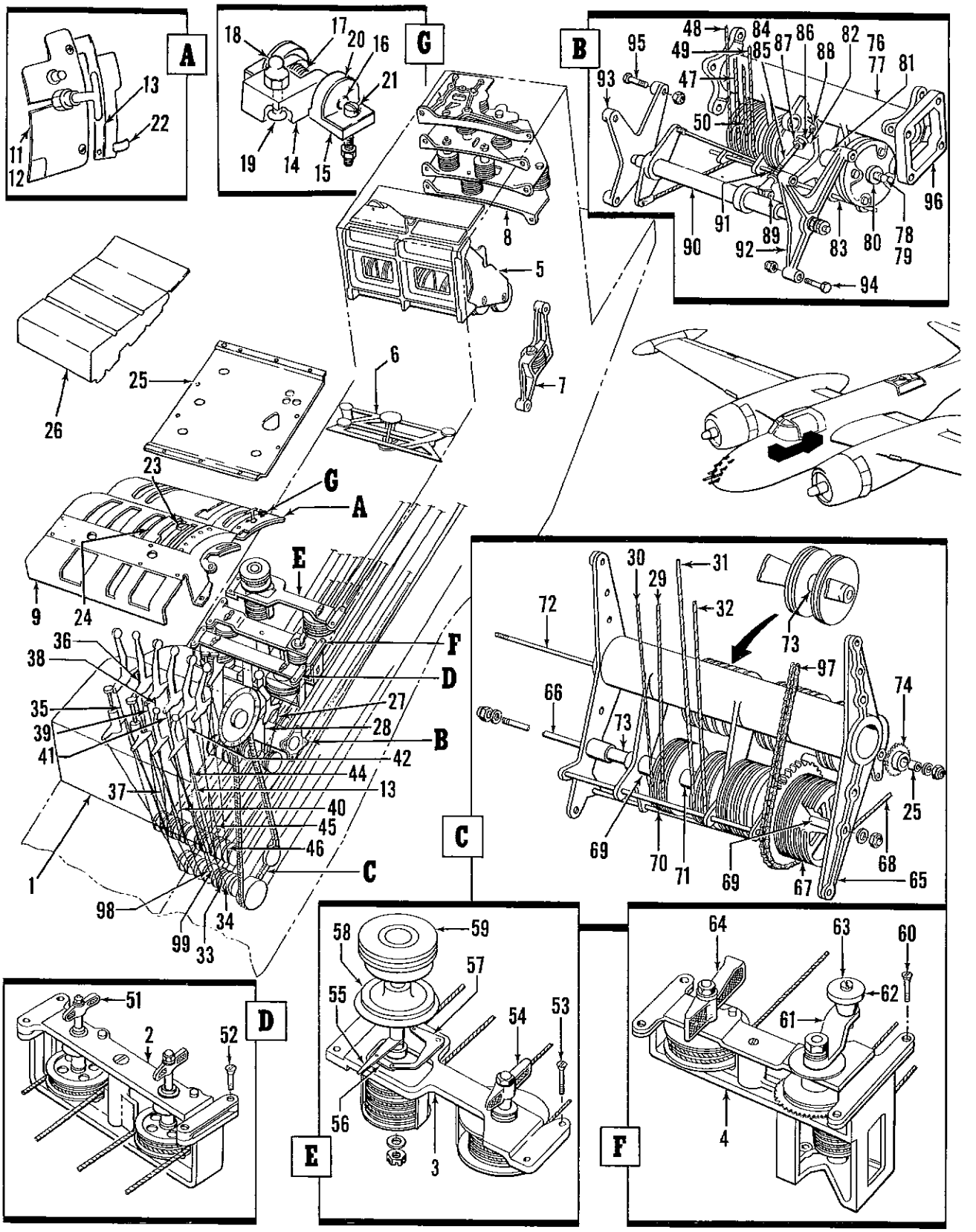

Figure 71. Control Pedestal Installation

FIG. AND INDEX NO.	PART NUMBER	DESCRIPTION 1 2 3 4 5 6 7	UNITS PER ASSY	USABLE ON CODE
71-	26-9201-1	PEDESTAL CONTROL INSTL (altered from 5153223 (18355)) (for NHA see fig. 4)	REF	
-1	26-9203	. CONTROL ASSY, Cockpit pedestal (for details see fig.	1	
-2	4158874	. CONTROL ASSY, Fuel selector (18355) (for details see fig. 73)	1	
-3	5150188	. CONTROL ASSY, Emergency hydraulic selector and aileron trim tab (18355) (for details see fig. 73)	1	
-4	5150190	. CONTROL ASSY, Bomb bay fuel selector and rudder trim tab (18355) (for details see fig. 73)	1	
-5	5202637-2	. PEDESTAL CONTROL INSTL, Upper sta 93 (18355) (for details see fig. 74)	NP	
-6	5150107	. PEDESTAL CONTROL INSTL, Lower sta 70 and 88 (18355) (for details see fig. 74)	NP	
-7	5202640	. PEDESTAL CONTROL INSTL, Lower sta 88 to 120 (18355) (for details see fig. 74)	NP	
-8	5202641	. PEDESTAL PULLEY BRACKET INSTL, Sta 120 (18355) (for details see fig. 74)	NP	
-9	26-9521-1	. COVER, Pedestal controls	1	
-10	210-032	. HANDLE, Control (70436)	1	
-11	26-7120-3	. PLATE, Control handle	1	
		(ATTACHING PARTS)		
	MS20365-832	. NUT	2	
	AN960-8	. WASHER	2	
-12	AN507-832R10	. SCREW	2	
		----*----		
-13	26-1066-1	. COVER, Pedestal flap control	1	
	26-1208-1	. STOP ASSY, Flap control, 38° pedestal	1	
-14	26-1208-3	. . STOP, Flap control	1	
-15	26-1208-5	. . SUPPORT, Flap control	1	
-16	26-1208-7	. . PIN	1	
-17	26-1208-9	. . SPRING (41361)	1	
-18	P101-473	. . STUD (78553)	1	
-19	AN507-632R8	. . SCREW	1	
-20	26-1208-11	. . RETAINER	2	
		(ATTACHING PARTS)		
	AN340C6	. . NUT	2	
-21	AN500A6-8	. . SCREW	2	
		----*----		
-22	26-1566-1	. STOP, Flap lever	1	
-23	26-9250-11	. BLOCK, Stop	1	
		(ATTACHING PARTS)		
	MS20365-1032	. NUT	2	
	AN509-10RB	. SCREW	2	
		----*----		
-24	26-9250-13	. PLATE	1	
-25	5195602	. COVER ASSY, Control pedestal sta 49 to 70 (18355)	1	
-26	26-9239-48	. COVER, Control pedestal sta 68 to 93 (18355)	1	
-27	2074407-16-4-11123	. CABLE ASSY, Landing gear down (18355)	1	
-28	2074407-16-4-11123	. CABLE ASSY, Landing gear up (18355)	1	
-29	2074407-16-4-16824	. CABLE ASSY, Blower high, RH (18355)	1	
-30	2074407-16-4-16000	. CABLE ASSY, Blower low, RH (18355)	1	
-31	2074407-16-4-16824	. CABLE ASSY, Blower high, LH (18355)	1	
-32	2074407-16-4-16824	. CABLE ASSY, Blower low, LH (18355)	1	
-33	2074407-16-4-10608	. CABLE ASSY, Emergency brake on (18355)	1	
-34	2074407-16-4-10608	. CABLE ASSY, Emergency brake release (18355)	1	
-35	2074407-16-6-15100	. CABLE ASSY, Mixture lean, RH (18355)	1	
-36	2074407-16-6-16700	. CABLE ASSY, Mixture rich, RH (18355)	1	
-37	2074407-16-6-16000	. CABLE ASSY, Mixture lean, LH (18355)	1	
-38	2074407-16-6-17416	. CABLE ASSY, Mixture rich, LH (18355)	1	
-39	2074407-16-4-17216	. CABLE ASSY, RPM decrease, RH (18355)	1	A
	2074407-16-6-16700	. CABLE ASSY, RPM decrease, RH (18355)	1	B
-40	2074407-16-4-16624	. CABLE ASSY, RPM increase, RH (18355)	1	A
	2074407-16-6-16000	. CABLE ASSY, RPM increase, RH (18355)	1	B
-41	2074407-16-4-17216	. CABLE ASSY, RPM decrease, LH (18355)	1	A
	2074407-16-6-17416	. CABLE ASSY, RPM decrease, LH (18355)	1	B
-42	2074407-16-4-16824	. CABLE ASSY, RPM increase, LH (18355)	1	A
	2074407-16-6-16000	. CABLE ASSY, RPM increase, LH (18355)	1	B

FIG. AND INDEX NO.	PART NUMBER	DESCRIPTION 1 2 3 4 5 6 7	UNITS PER ASSY	USABLE ON CODE
71-43	2074407-16-6-15100	. CABLE ASSY, Throttle closed, RH (18355)	1	
-44	2074407-16-6-16700	. CABLE ASSY, Throttle open, RH (18355)	1	
-45	2074407-16-6-16700	. CABLE ASSY, Throttle closed, LH (18355)	1	
-46	2074407-16-6-15100	. CABLE ASSY, Throttle open, LH (18355)	1	
-47	2074407-16-4-15116	. CABLE ASSY, Carburetor air hot, RH (18355)	1	
-48	2074407-16-4-15116	. CABLE ASSY, Carburetor air cold, RH (18355)	1	
-49	2074407-16-4-16000	. CABLE ASSY, Carburetor air hot, LH (18355)	1	
-50	2074407-16-4-14300	. CABLE ASSY, Carburetor air cold, LH (18355)	1	
-51	33B6001	. HANDLE, Cock control (18355)	3	
	AN960D10L	. WASHER	3	
	22K1-02	. NUT, Cap (72962)	3	
-52	AN507-1032-14	. SCREW	4	
-53	AN507-1032-10	. SCREW	4	
-54	2150727	. HANDLE, Emergency hydraulic selector control (18355)	1	
-55	1056308	. POINTER ASSY, Trim tab control unit (18355)	1	
-56	1056306	. LINK, Trim tab control unit (18355)	1	
-57	1056307	. LEVER ASSY, Trim tab control unit (18355)	1	
-58	4055640-1	. BASE, Trim tab control knob (18355)	1	
-59	2055552	. KNOB, Trim tab control (18355)	1	
-60	AN507-1032-14	. SCREW	4	
	2150845	. HANDLE ASSY, Rudder trim tab control (18355)	1	
-61	2150845-2	. . HANDLE (18355)	1	
-62	1151040	. . KNOB (18355)	1	
-63	1151041	. . BOLT (18355)	1	
	AN960D10L	. . WASHER	1	
	AN320-3	. . NUT	1	
-64	33B6001	. HANDLE, Cock control (18355)	1	
	AN960D10L	. WASHER	1	
	22K1-02	. NUT, Cap (72962)		
-65	5150142	. BRACKET, Control pedestal pulley sta 37 (18355)	1	
-66	1154397-6	. BOLT, Pedestal pulley (18355)	1	
	4129579-2	. DRUM AND CABLE ASSY, Elevator trim tab control (18355)	1	
-67	2150781	. . DRUM ASSY, Elevator trim tab control (18355)	1	
-68	2074407-6-6-84714	. . CABLE ASSY (18355)		
-69	1026614G3-118	. SPACER, OD bearing (18355)	1	
-70	AN210-2A	. PULLEY	28	
-71	NAS43DD3-222	. SPACER	1	
-72	1154397-18	. BOLT, Pedestal pulley (18355)	1	
-73	NAS43DD3-18	. SPACER	3	
-74	1150988	. SPROCKET, Elevator trim tab chain idler (18355)	1	
-75	1150989	. BUSHING, Elevator trim tab chain idler sprocket (18355)	1	
-76	5157572	. BRACKET, Control pedestal pulley sta 50 (18355)	1	A
-77	5208625	. BRACKET, Control pedestal, sta 50 (18355)	1	B
-78	1154397-12	. BOLT, Pedestal pulley special (18355)	1	A
-79	1154397-20	. BOLT, Pedestal pulley special (18355)	1	B
-80	1026614G3-031	. SPACER, OD bearing (18355)	1	A
-81	NAS54DD3-60	. SPACER (formerly 117425-3D030)	1	
-82	NAS43DD3-232	. SPACER (formerly 117425-3D116)	1	
-83	1202697	. PIN, Switch retaining (18355)	1	A
-84	1159880-2	. ROD, Electrical switch push-pull (18355)	1	A
-85	NAS94-3375	. ROD	1	B
-86	AN486-4	. CLEVIS	1	A
	REB3N	. END, Rod (86174)	2	B
-87	AN316-4R	. NUT	2	
-88	AN23-16	. BOLT	20	B
-89	AN23-17	. BOLT	1	B
	AN320-3	. NUT	AR	
-90	4208526	. SHAFT ASSY, Landing gear control bellcrank (18355)	1	B
-91	AN316-5R	. NUT	4	B
-92	4208520	. BRACKET ASSY, Landing gear control shaft LH (18355)	1	B
-93	4208519	. BRACKET ASSY, Landing gear control shaft RH (18355)	1	B
	F520-5	. . BUSHING, Oilite (70417)	1	B
-94	AN3-14A	. BOLT	3	B
	MS20365-1032	. NUT	3	B
-95	AN3-10A	. BOLT	3	B

FIG. AND INDEX NO.	PART NUMBER	DESCRIPTION 1 2 3 4 5 6 7	UNITS PER ASSY	USABLE ON CODE
71-	MS20365-1032	. NUT	3	B
-96	1158461	. SPACER, Control pedestal pulley bracket sta 50 (18355)	1	
-97	82	. CHAIN, Roller link type C (72625)	1	
-98	2077407-16-5-3108	. CABLE ASSY, Control lock locked (18355)	1	
	2077407-4-8-7116	. CABLE ASSY, Control lock locked (18355)	1	
-99	2077407-16-5-3924	. CABLE ASSY, Control lock unlocked (18355)	1	
	2077407-4-8-6008	. CABLE ASSY, Control lock unlocked (18355)	1	
		A - USAF 17648, 17649, 17653, 17654, 17657, 17663 and 17664		
		B - USAF 17640 thru 17647, 17650 thru 17652, 17655, 17656, 17658 thru 17662, 17665 thru 17679		

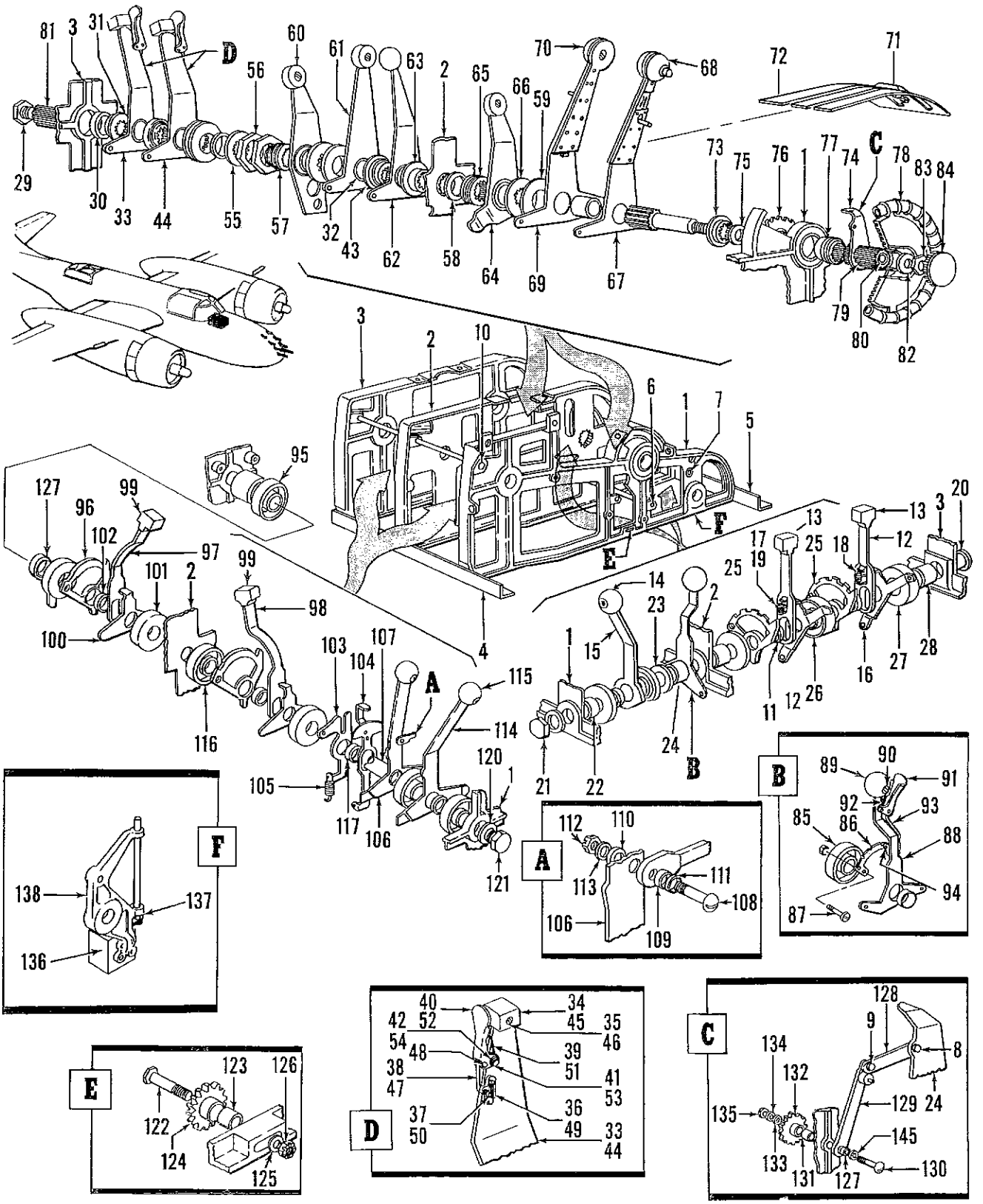

Figure 72. Cockpit Pedestal Control Assembly

FIG. AND INDEX NO.	PART NUMBER	DESCRIPTION 1 2 3 4 5 6 7	UNITS PER ASSY	USABLE ON CODE
72-	26-9203-1	CONTROL ASSY, Cockpit pedestal (altered from 5202638, 5207850, . . . 5208628 or 5276530 (18355)) (for NHA see fig. 71)	REF	
-1	5157825	. FRAME ASSY, Control pedestal LH (18355)	1	
-2	5157826	. FRAME ASSY, Control pedestal center (18355)	1	
-3	5157827	. FRAME ASSY, Control pedestal RH (18355)	1	
-4	5202638-4	. ANGLE (18355)	1	
		(ATTACHING PARTS)		
	MS20365-1032	. NUT	2	
	AN960D10	. WASHER	2	
	AN3-5A	. BOLT	2	
		----*----		
-5	5202638-2	. ANGLE (18355)	1	
		(ATTACHING PARTS)		
	MS20365-1032	. NUT	1	
	AN960D10	. WASHER	1	
	AN507-1032R8	. SCREW	1	
	AN520-10-12	. SCREW	1	
		----*----		
-6	1150994	. PIN (18355)	2	
	MS24665-132	. PIN	2	
-7	1158672-4	. TUBE, Quadrant retaining (18355)	1	
	MS24665-134	. PIN	1	
-8	MS20392-7	. PIN	1	
-9	MS20392-11	. PIN	1	
	AN960D6	. WASHER	2	
	MS24665-132	. PIN	2	
-10	1158672-2	. TUBE, Quadrant retaining (18355)	1	
	MS24665-134	. PIN	1	
-11	1193222-10	. SPACER, Control pedestal lever steel (18355)	4	
-12	2158737	. LEVER, Carburetor air control (18355)	2	
-13	2062663-2BL4BL125	. KNOB (18355)	2	
		(ATTACHING PARTS)		
	AN507-832R12	. SCREW	2	
		----*----		
	26-1064-1	. LEVER ASSY, Flap control	1	
-14	NAS198L-125	. . KNOB	1	
		(ATTACHING PARTS)		
	AN507-632-8	. . SCREW	1	
		----*----		
	26-1064-9	. . GEAR	1	
		(ATTACHING PARTS)		
	MS20365-632	. . NUT	3	
	AN507-632-8	. . SCREW	3	
		----*----		
	26-1064-3	. . BUSHING	1	
-15	26-1064-5	. . HANDLE	1	
-16	1158659	. BELLCRANK ASSY, Carburetor air control lever (18355)	2	
-17	1158662	. WASHER (18355)	4	
-18	1158661	. PIN, Control lever spring retaining (18355)	4	
-19	1158663	. SPRING, Control lever (18355)	4	
-20	2157837-4	. SHAFT, Control pedestal lever aft (18355)	1	
	143908-018D108-062	. WASHER (18355)	1	
-21	1150984	. NUT, Control pedestal shaft retainer (18355)	1	
-22	1193973-8	. SPACER, Control pedestal lever shaft tubing (18355)	1	
-23	124682-12D20-064	. WASHER (18355)	1	
-24	1193973-6	. SPACER, Control pedestal lever shaft tubing (18355)	1	
-25	1158670	. QUADRANT, Carburetor air control lever (18355)	2	
-26	4190209-4	. SPACER, Pedestal control lever shaft (18355)	1	
-27	4190209-20	. SPACER, Pedestal control shaft (18355)	4	
-28	1193973-4	. SPACER, Control pedestal lever shaft tubing (18355)	2	
-29	1150957	. NUT, Mixture control lever adjusting (18355)	1	
-30	1157840	. BUSHING, Mixture control lever adjusting (18355)	1	
-31	4158822-6	. SPACER, Mixture control lever (18355)	1	
-32	1157833	. SLEEVE, Throttle rpm and mixture bearing (18355)	6	
	4151133	. LEVER ASSY, Mixture control RH (18355)	1	
-33	4151133-2	. . LEVER (18355)	1	
-34	2062650-4R8R187	. . KNOB (18355)	1	
		(ATTACHING PARTS)		
-35	1087510-10-10	. . SCREW (18355)	1	
		----*----		

FIG. AND INDEX NO.	PART NUMBER	DESCRIPTION 1 2 3 4 5 6 7	UNITS PER ASSY	USABLE ON CODE
72-36	2284599-1	. . LATCH (18355)	1	
-37	2284650	. . SCREW (18355)	2	
	MS20392-15	. . PIN	1	
-38	2284655	. . LINK (18355)	1	
-39	2208890	. . SPRING (18355)	1	
-40	2285287	. . LEVER (18355)	1	
-41	MS20392-17	. . PIN	1	
-42	AN960-4	. . WASHER	2	
-43	4158822-2	. SPACER, RPM control lever (18355)	2	
	4151134	. LEVER ASSY, Mixture control LH (18355)	1	
-44	4151134-2	. . LEVER (18355)	1	
-45	2062650-4R8R187	. . KNOB (18355)	1	
		(ATTACHING PARTS)		
-46	1087510-10-10	. . SCREW (18355)	1	
		----*----		
-47	2284598	. . LINK (18355)	1	
-48	MS20392-15	. . PIN	1	
-49	2284599	. . LATCH (18355)	1	
-50	2284650	. . SCREW (18355)	2	
-51	2208890	. . SPRING (18355)	1	
-52	2285287	. . LEVER (18355)	1	
-53	MS20392-17	. . PIN	1	
-54	AN960-4	. . WASHER	2	
-55	1204910	. WASHER, Involute spline (18355)	1	
-56	1150960	. NUT, RPM control lever adjusting (18355)	2	
-57	1157835	. SLEEVE, RPM lock lever screw (18355)	1	
-58	1190037	. RING, Control lever shaft retainer snap (18355)	2	
-59	143908-026M208-032	. WASHER (18355)	3	
-60	4157839	. LEVER ASSY, RPM lock (18355)	1	
	2062607-6R8R125	. . KNOB (18355)	1	
		(ATTACHING PARTS)		
	AN507-1032R8	. . SCREW	1	
		----*----		
-61	4151135	. LEVER ASSY, RPM control RH (18355)	1	
	NAS124W187	. . KNOB	1	
		(ATTACHING PARTS)		
	1087510-10-10	. . SCREW (18355)	1	
		----*----		
-62	4151136	. LEVER ASSY, RPM LH (18355)	1	
	NAS124W187	. . KNOB	1	
		(ATTACHING PARTS)		
	1087510-10-10	. . SCREW (18355)	1	
		----*----		
-63	4158822-8	. SPACER, RPM control lever (18355)	1	
-64	4157831	. LEVER ASSY, Throttle lock (18355)	1	
	2062607-6R8R125	. . KNOB (18355)	2	
		(ATTACHING PARTS)		
	AN507-1032R8	. . SCREW	1	
		----*----		
-65	1157841	. SLEEVE, Throttle lock lever screw (18355)	1	
-66	1157834	. WASHER, Control lever (18355)	3	
	26-9250-1	. THROTTLE LOCK INSTL (LH & RH)	1	
-67	26-9250-3	. . THROTTLE ASSY, LH (make from 4151109 (18355))	1	
-68	26-9250-19	. . . KNOB ASSY	1	
	26-9250-21	. . . . KNOB (Altered from C100P2-1 (97707)	1	
	26-9250-25	. . . . WASHER	1	
	26-9250-23	. . . . SWITCH (Altered from C100P2-1 (97707))	1	
		(ATTACHING PARTS)		
	COMM	. . . . NO. 2 X 3/8 SELF TAPPING, Phillip recessed oval head screw	2	
		----*----		
-69	26-9250-5	. . THROTTLE ASSY, RH (Altered from 4151137 (18355))	1	
-70	1202321	. . . KNOB (18355)	1	
		(ATTACHING PARTS)		
	AN507-1032R12	. . . SCREW	1	
		----*----		
-71	26-9250-11	. . BLOCK	1	
		(ATTACHING PARTS)		
	MS20365-1032	. . NUT	2	

FIG. AND INDEX NO.	PART NUMBER	DESCRIPTION 1 2 3 4 5 6 7	UNITS PER ASSY	USABLE ON CODE
72-	AN309-10R8	. . SCREW	2	
		----*----		
-72	26-9250-13	. . PLATE	1	
	26-9250-17	. . PLACARD	1	
-73	4158822-4	. SPACER, Throttle control lever (18355)	1	
-74	2150827	. INDICATOR, Elevator trim tab control (18355)	1	
-75	143908-016S104-125	. WASHER (18355)	1	
-76	1150964	. SPROCKET, Elevator trim tab drum drive (18355)	1	
-77	1150965	. SPACER, Elevator trim tab indicator (18355)	1	
-78	4159511	. WHEEL ASSY, Elevator trim tab control (18355)	1	
-79	1190179	. SHAFT, Elevator trim tab sprocket drive (18355)	1	
-80	1150962	. BUSHING, Throttle control lever adjusting (18355)	1	
-81	2157838	. SHAFT, Control pedestal lever center (18355)	1	
-82	143908-012S104-064	. WASHER (18355)	1	
-83	MS20365-624	. NUT	1	
-84	50890	. DOT PLUG (61864)	1	
-85	1193222-4	. SPACER, Control pedestal lever steel (18355)	1	
-86	1158671	. QUADRANT, Landing gear control lever (18355)	1	
-87	AN501A416-28	. SCREW	2	
	MS20365-428	. NUT	2	
	4191523	. LEVER ASSY, Landing gear control (18355)	1	
-88	4204840	. . LEVER (18355)	1	
-89	NAS198R125	. . KNOB	1	
		(ATTACHING PARTS)		
-90	AN507-1032R16	. . SCREW	1	
		----*----		
-91	2116137	. . LEVER (18355)	1	
-92	2208890	. . SPRING (18355)	1	
-93	1204861	. . SPRING (18355)	1	
-94	1116233	. . LATCH (18355)	1	
	1116218	. . SCREW (18355)	1	
	MS20392-13	. . PIN	2	
	AN960-4	. . WASHER	3	
-95	1193973-14	. SPACER (18355)	1	
-96	1158666	. QUADRANT, Blower control lever (18355)	2	
-97	2159628	. LEVER, Blower control RH (18355)	1	
-98	4158820	. LEVER, Blower control LH (18355)	1	
-99	2062663-2A4A125	. KNOB (18355)	2	
-100	1158660	. BELLCRANK ASSY, Blower control lever (18355)	2	
-101	4190209-10	. SPACER, Control pedestal lever shaft (18355)	2	
-102	1193222-10	. SPACER, Control pedestal lever steel (18355)	2	
-103	1193220	. GUIDE, Control lock lever stop (18355)	1	
-104	2192705	. STOP ASSY, Control lock lever (18355)	1	
-105	1193221	. SPRING, Control lock lever (18355)	1	
-106	4157828	. LEVER ASSY, Control lock (18355)	1	
-107	NAS121R187	. . KNOB	1	
		(ATTACHING PARTS)		
	1067507-1	. . SCREW (18355)	1	
		----*----		
-108	AN23-14	. BOLT	1	
-109	2033901-5S187-004	. SPACER (18355)	1	
-110	1026614G3-005	. SPACER (18355)	1	
-111	143908-006S018-064	. WASHER (18355)	1	
-112	AN320-3	. NUT	1	
-113	AN960D10	. WASHER	1	
-114	4157836	. LEVER ASSY, Emergency brake (18355)	1	
-115	NAS121R187	. . KNOB	1	
		(ATTACHING PARTS)		
	1067507-1	. . SCREW (18355)	1	
		----*----		
-116	4190209-18	. SPACER (18355)	4	
-117	1193222-12	. SPACER (18355)	1	
-118	1193222-2	. SPACER (18355)	1	
-119	2157837-2	. SHAFT, Control pedestal lever forward (18355)	1	
-120	143908-01S108-062	. WASHER (18355)	1	
-121	1150984	. NUT, Control pedestal shaft retainer (18355)	1	
-122	AN3-12	. BOLT	1	

FIG. AND INDEX NO.	PART NUMBER	DESCRIPTION 1 2 3 4 5 6 7	UNITS PER ASSY	USABLE ON CODE
72-123	1026614G3-014	. BUSHING (18355)	1	
-124	1150988	. SPROCKET (18355)	1	
-125	AN960D10	. WASHER	1	
-126	AN320-3	. NUT	1	
-127	1150985	. BUSHING, Elevator trim tab stop arm (18355)	1	
-128	1150987	. LINK (18355)	1	
-129	2150826	. ARM ASSY, Elevator trim tab indicator follower (18355)	1	
-130	AN23-24	. BOLT	1	
-131	1150989	. BUSHING, Elevator trim tab chain idler sprocket (18355)	1	
-132	1150988	. SPROCKET, Elevator trim tab chain idler (18355)	1	
-133	AN960-10L	. WASHER	2	
-134	AN960-10	. WASHER	1	
-135	AN320-3	. NUT	1	
-136	13131	. SOLENOID	1	
		(ATTACHING PARTS)		
	AN3-7	. BOLT	4	
-137	26-1105-1	. LINK	1	
	117425-30-10	. SPACER	1	
	AN315-3R	. NUT	1	
	MS20365-1032	. NUT	2	
	2276525	. STOP (18355)	1	
-138	26-9530-1	. BRACKET ASSY	1	
		----*----		

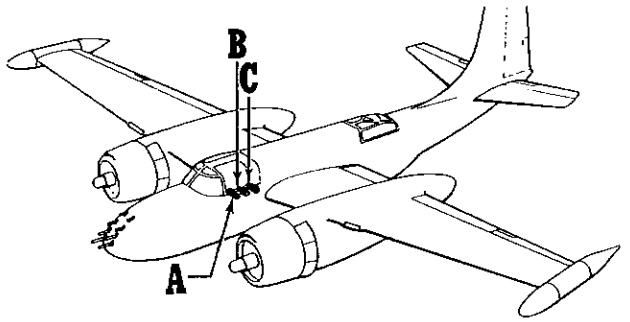

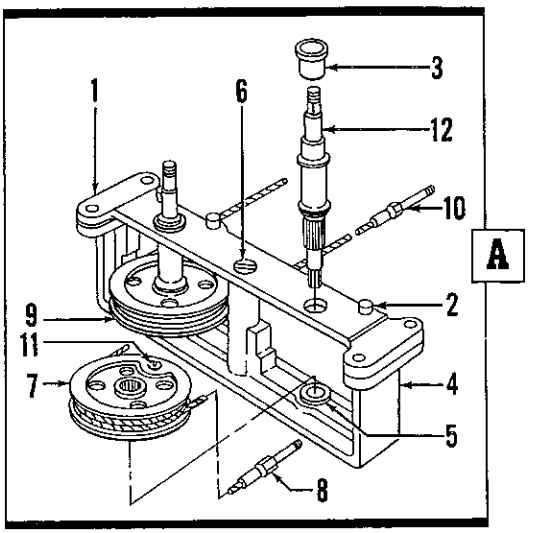

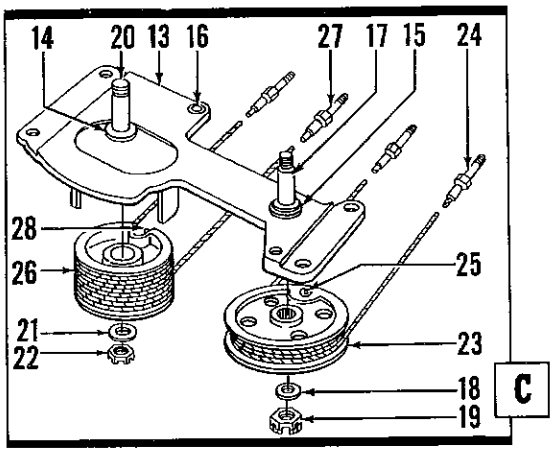

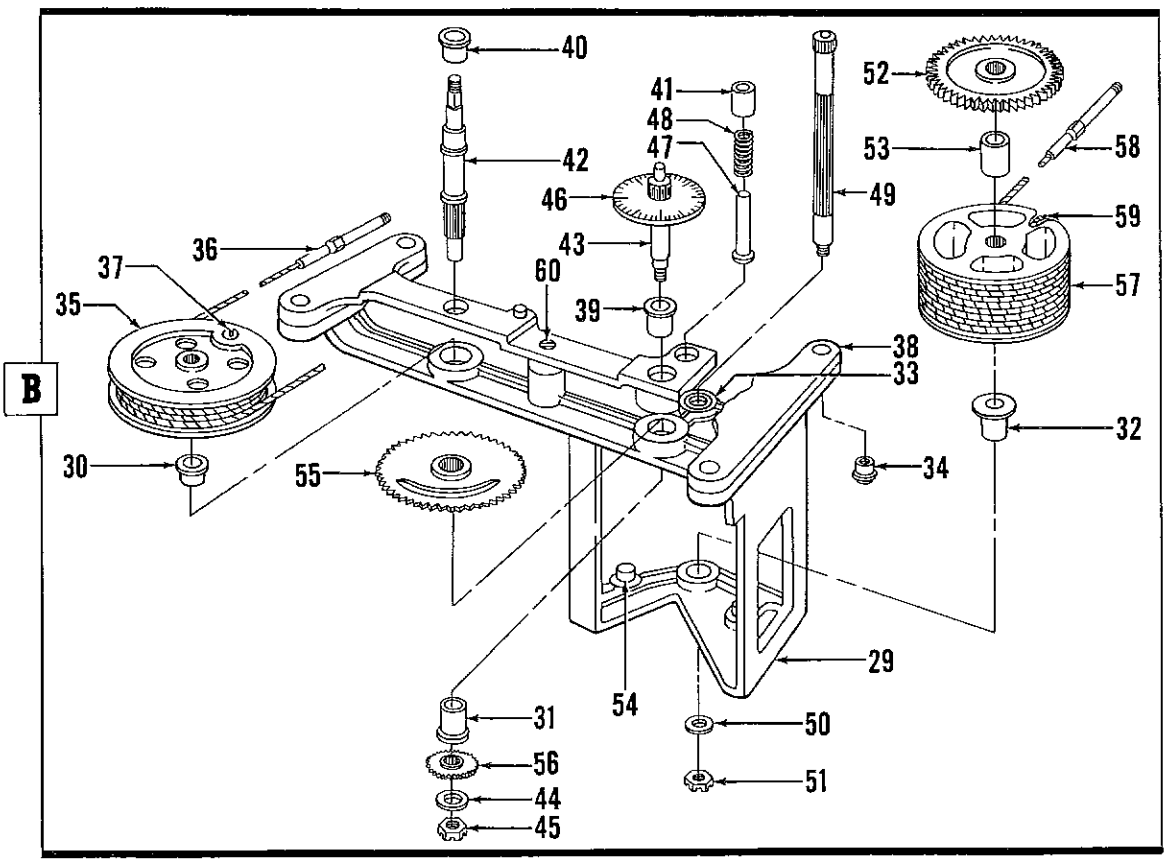

Figure 73. Trim Tab and Selector Control Assemblies

FIG. AND INDEX NO.	PART NUMBER	DESCRIPTION 1 2 3 4 5 6 7	UNITS PER ASSY	USABLE ON CODE
73-		TRIM TAB AND SELECTOR CONTROL ASSEMBLIES		
	4158874	. CONTROL ASSY, Fuel selector (18355) (for NHA see fig. 71)	REF	
	4158857	. . BRACKET ASSY (18355)	1	
-1	4158857-2	. . . BRACKET (18355)	1	
-2	1150524	. . . PIN (18355)	4	
-3	1190067	. . . BUSHING (18355)	2	
	4158858	. . BRACKET ASSY (18355)	1	
-4	4158858-2	. . . BRACKET (18355)	1	
-5	1150589	. . . BUSHING (18355)	2	
	MS20365-1032	. . NUT	1	
	AN960D10	. . WASHER	1	
-6	AN507-1032R60	. . SCREW	1	
	4129545-2	. . DRUM AND CABLE ASSY, Fuel selector LH (18355)	1	
-7	1155468-4	. . . DRUM (18355)	1	
-8	2074407-6-6-25516	. . . CABLE ASSY (18355)	1	
	4129545-4	. . DRUM AND CABLE ASSY, Fuel selector RH (18355)	1	
-9	1155468-4	. . . DRUM (18355)	1	
-10	2074407-6-6-26200	. . . CABLE ASSY (18355)	1	
	MS20365-1032	. . . NUT	1	
	AN960D10	. . . WASHER	1	
-11	AN23-11A	. . . BOLT	1	
-12	1158667	. . SHAFT (18355)	2	
	5150188	. CONTROL ASSY, Emergency hydraulic selector and aileron trim tab (18355) (for NHA see fig. 71)	REF	
	5150189	. . BRACKET ASSY, Emergency hydraulic selector and aileron trim tab (18355)	1	
-13	5150189-2	. . . BRACKET (18355)	1	
-14	1150522	. . . BUSHING (18355)	1	
-15	1150523	. . . BUSHING (18355)	1	
-16	A304-9	. . . BUSHING, Oilite (70417)	1	
-17	1150525	. . SHAFT (18355)	1	
-18	AN960-516L	. . WASHER	1	
-19	AN310-5	. . NUT	1	
-20	1150542	. . SHAFT (18355)	1	
-21	AN960D416	. . WASHER	1	
-22	AN320-4	. . NUT	1	
	4129545-8	. . DRUM AND CABLE ASSY (18355)	1	
-23	1155468-4	. . . DRUM (18355)	1	
-24	2074407-4-4-16619	. . . CABLE ASSY (18355)	1	
	MS20365-1032	. . . NUT	1	
	AN960D10	. . . WASHER	1	
-25	AN23-11A	. . . BOLT	1	
	2150737-2	. . DRUM AND CABLE ASSY (18355)	1	
-26	2150738	. . . DRUM (18355)	1	
-27	2074407-6-6-24700	. . . CABLE ASSY (18355)	1	
-28	144185-104	. . . PIN (18355)	1	
	5150190	. CONTROL ASSY, Bomb bay fuel selector and rudder trim tab (18355) (for NHA see fig. 71)	REF	
	5150192	. . BRACKET ASSY (18355)	1	
-29	5150192-2	. . . BRACKET (18355)	1	
-30	1150589	. . . BUSHING (18355)	1	
-31	1150590	. . . BUSHING (18355)	1	
-32	1150591	. . . BUSHING (18355)	1	
-33	1150592	. . . BUSHING (18355)	1	
-34	22D12-02	. . . NUT, Spline (72962)	4	
	4129545-6	. . DRUM AND CABLE ASSY (18355)	1	
-35	1155468-4	. . . DRUM (18355)	1	
-36	2074407-4-4-10800	. . . CABLE ASSY (18355)	1	
	MS20365-1032	. . . NUT	1	
	AN960D10	. . . WASHER	1	
-37	AN23-11A	. . . BOLT	1	
	5150191	. . BRACKET ASSY (18355)	1	
-38	5150191-2	. . . BRACKET (18355)	1	
-39	1150587	. . . BUSHING (18355)	1	

FIG. AND INDEX NO.	PART NUMBER	DESCRIPTION 1 2 3 4 5 6 7	UNITS PER ASSY	USABLE ON CODE
73-40	1150588	. . . BUSHING (18355)	1	
-41	A3751	. . . BUSHING, Oilite (70417)	1	
-42	1150905	. . SHAFT (18355)	1	
-43	1150597	. . SHAFT (18355)	1	
-44	AN960-416	. . WASHER	1	
-45	AN320-4	. . NUT	1	
-46	1150900	. . INDICATOR ASSY, Rudder trim tab position (18355)	1	
-47	1150901	. . PIN (18355)	1	
-48	1150902	. . SPRING (18355)	1	
-49	1150593	. . SHAFT ASSY (18355)	1	
-50	AN960-10	. . WASHER	1	
-51	AN320-3	. . NUT	1	
-52	1150596	. . GEAR (18355)	1	
-53	NAS43DD6-44	. . SPACER	1	
-54	143358-205	. . PIN (18355)	2	
-55	2151616	. . GEAR (18355)	1	
-56	1150598	. . GEAR (18355)	1	
	4129570-2	. . DRUM AND CABLE ASSY (18355)	1	
-57	2150770	. . . DRUM (18355)	1	
-58	2074407-6-6-84900	. . . CABLE ASSY (18355)	1	
-59	144185-104	. . . PIN (18355)	1	
	MS20365-1032	. . NUT	1	
	AN960-10	. . WASHER	1	
-60	AN507-1032-36	. . SCREW	1	

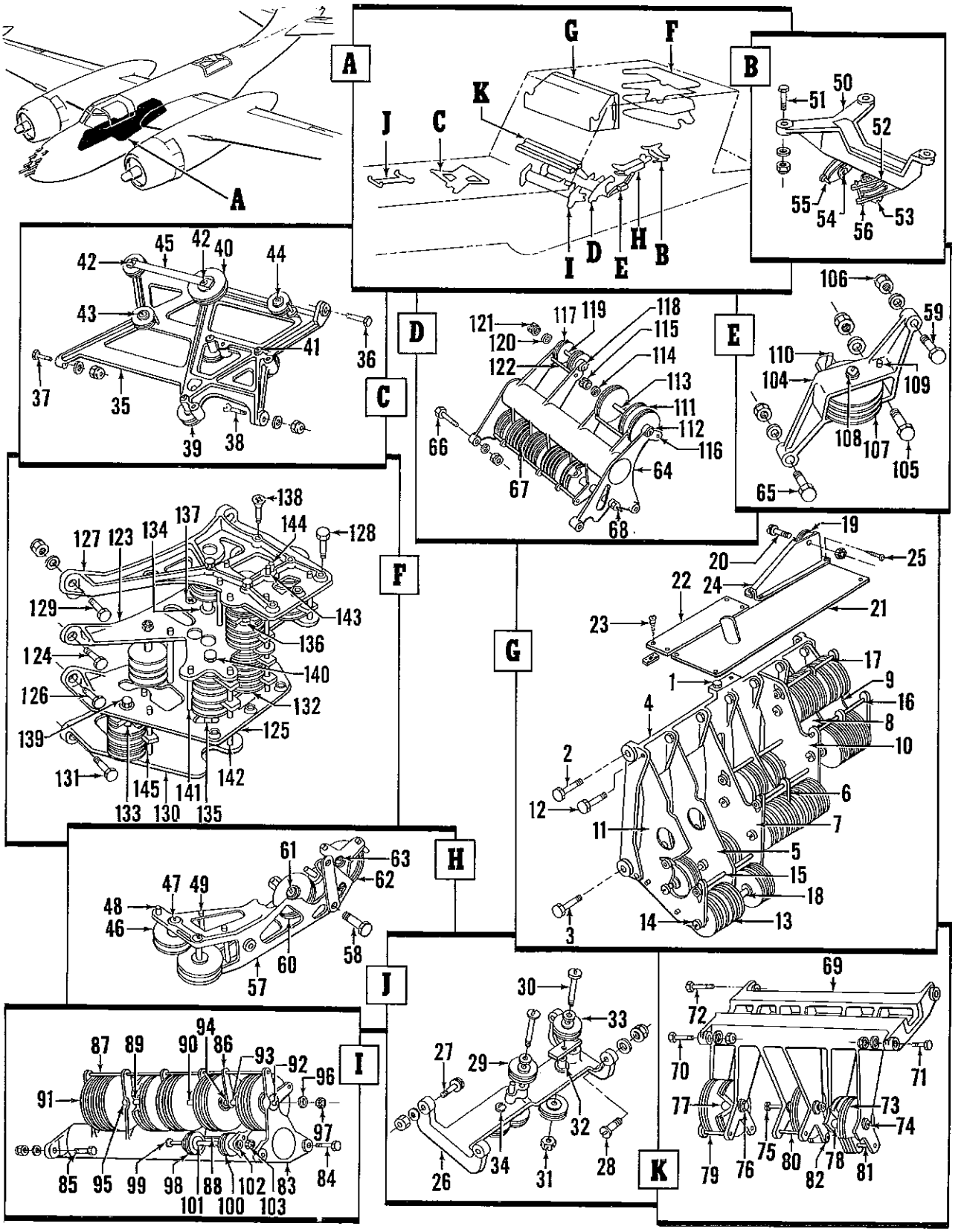

Figure 74. Upper and Lower Pedestal Control and Pulley Bracket Installation

FIG. AND INDEX NO.	PART NUMBER	DESCRIPTION 1 2 3 4 5 6 7	UNITS PER ASSY	USABLE ON CODE
74-		UPPER AND LOWER PEDESTAL CONTROL AND PULLEY BRACKET INSTL		
	5202637	. PEDESTAL CONTROL INSTL, Upper sta 93 (18355) (for NHA see fig. 71)	REF	
	5202637-2	. . BRACKET ASSY, Control pedestal upper sta 93 (18355)	1	
	5193030	. . . BRACKET ASSY, Pedestal pulley upper sta 93 (18355) (ATTACHING PARTS)	1	
	MS20365-1032	. . . NUT	6	
	AN960D10	. . . WASHER	6	
-1	AN3-6A	. . . BOLT	2	
-2	AN3-10A	. . . BOLT	2	
-3	AN3-11A	. . . BOLT ----*----	2	
-4	5191097	. . . . BRACKET, Pedestal pulley upper sta 93 (18355)	1	
-5	2157746	. . . . PLATE ASSY, Lower tier middle sta 93 (18355)	1	
-6	2157747	. . . . PLATE ASSY, Middle tier middle sta 93 (18355)	1	
-7	2157748	. . . . PLATE ASSY, Lower tier inner sta 93 (18355)	1	
-8	2157749	. . . . PLATE ASSY, Upper tier middle sta 93 (18355)	1	
-9	2157750	. . . . PLATE ASSY, Upper tier outer sta 93 (18355)	1	
-10	2157751	. . . . PLATE ASSY, Upper tier inner sta 93 (18355)	1	
-11	2157752	. . . . PLATE ASSY, Lower tier outer sta 93 (18355)	1	
	MS20365-1032	. . . . NUT	14	
	AN960D10	. . . . WASHER	14	
-12	AN3-5A	. . . . BOLT	14	
-13	AN210-2A	. . . PULLEY	32	
	AN320-3	. . . NUT	6	
	AN960D10	. . . WASHER	6	
-14	AN23-57	. . . BOLT	6	
-15	143358-303	. . . PIN (18355)	4	
-16	NAS427K48	. . . PIN	7	
-17	143358-214	. . . PIN (18355)	1	
-18	1074744-3D594	. . . SPACER (18355)	8	
-19	AN210-1A	. . . PULLEY	1	
	AN320-3	. . . NUT	1	
	AN960D10	. . . WASHER	1	
-20	AN23-11	. . . BOLT	1	
-21	2192702	. . PLATE (18355)	1	
-22	2192701	. . PLATE (18355) (ATTACHING PARTS)	1	
-23	AN530-8-8	. . SCREW	8	
	A1789-8Z1	. . NUT, Speed (78553) ----*----	2	
-24	2277001	. . PLATE (18355) (ATTACHING PARTS)	1	
-25	AN530-8-8	. . SCREW	4	
	A1789-8Z1	. . NUT, Speed (78553) ----*----	2	
	5150107	. PEDESTAL CONTROL INSTL, Lower sta 70 and 88 (18355) (for NHA see fig. 71)	REF	
-26	5150109	. . BRACKET ASSY (18355) (ATTACHING PARTS)	1	
	MS20365-1032	. . NUT	4	
	AN960D10	. . WASHER	8	
-27	AN23-13A	. . BOLT	3	
-28	AN23-17A	. . BOLT ----*----	1	
-29	AN210-1A	. . PULLEY	4	
-30	AN23-32	. . BOLT	2	
	124682-3D12-065	. . WASHER (18355)	4	
-31	AN320-3	. . NUT	2	
-32	2033901-8K219-016	. . BUSHING (18355)	1	
-33	AN210-1A	. . PULLEY	1	
-34	AN23-22	. . BOLT	1	
	124682-3D12-065	. . WASHER (18355)	1	
	AN320-3	. . NUT	1	

FIG. AND INDEX NO.	PART NUMBER	DESCRIPTION 1 2 3 4 5 6 7	UNITS PER ASSY	USABLE ON CODE
74-35	5150111	. . BRACKET ASSY (18355)	1	
		(ATTACHING PARTS)		
	MS20365-1032	. . NUT	4	
	AN960D10	. . WASHER	4	
-36	AN3-7A	. . BOLT	2	
-37	AN3-6A	. . BOLT	1	
-38	AN507-1032R14	. . SCREW	1	
		----*----		
-39	AN210-1A	. . PULLEY	6	
-40	AN210-2A	. . PULLEY	1	
-41	AN23-23	. . BOLT	1	
	AN320-3	. . NUT	1	
-42	AN23-28	. . BOLT	2	
	AN320-3	. . NUT	2	
-43	AN23-21	. . BOLT	3	
	AN320-3	. . NUT	3	
-44	AN23-29	. . BOLT	1	
	AN320-3	. . NUT	1	
	AN960D10	. . WASHER	AR	
	124682-3D12-065	. . WASHER (18355)	AR	
-45	1193318	. . GUARD ASSY (18355)	1	
	AN960D10	. . WASHER	2	
	5202640	. PEDESTAL CONTROL INSTL, Lower sta 88 to 120 (18355)	REF	
		(for NHA see fig. 71)		
-46	AN210-2A	. . PULLEY	2	
	AN320-3	. . NUT	2	
	AN960D10	. . WASHER	2	
	1074744-3D455	. . SPACER (18355)	2	
-47	AN23-34	. . BOLT	2	
-48	NAS427K10	. . PIN	1	
-49	143358-113	. . PIN (18355)	2	
-50	4151226	. . BRACKET (18355)	1	
		(ATTACHING PARTS)		
	MS20365-1032	. . NUT	3	
	AN960D10	. . WASHER	3	
-51	AN3-6A	. . BOLT	3	
		----*----		
-52	AN210-1A	. . PULLEY	2	
	AN320-3	. . NUT	2	
	AN960D10	. . WASHER	2	
-53	AN23-19	. . BOLT	1	
-54	AN23-16	. . BOLT	1	
-55	143358-025	. . PIN (18355)	2	
-56	NAS427K8	. . PIN	2	
-57	5128663	. . BRACKET (18355)	1	
		(ATTACHING PARTS)		
	MS20365-1032	. . NUT	3	
	AN960D10	. . WASHER	3	
-58	AN3-7A	. . BOLT	2	
-59	AN3-12A	. . BOLT	1	
		----*----		
-60	AN210-2A	. . PULLEY	1	
-61	AN23-26	. . BOLT	1	
	AN960D10	. . WASHER	1	
	AN320-3	. . NUT	1	
	NAS427K12	. . PIN	2	
-62	AN210-2A	. . PULLEY	1	
-63	AN23-22	. . BOLT	1	
	AN960D10	. . WASHER	1	
	AN320-3	. . NUT	1	
	NAS427K12	. . PIN	2	
-64	5193098	. . BRACKET (18355)	1	
		(ATTACHING PARTS)		
	MS20365-1032	. . NUT	4	
	AN960D10	. . WASHER	4	
-65	AN3-13A	. . BOLT	1	
-66	AN3-10A	. . BOLT	3	
		----*----		

FIG. AND INDEX NO.	PART NUMBER	DESCRIPTION 1 2 3 4 5 6 7	UNITS PER ASSY	USABLE ON CODE
74-67	AN210-2A	. . PULLEY	16	
-68	1154397-2	. . STUD (18355)	1	
	AN960D10	. . WASHER	2	
	AN320-3	. . NUT	2	
	143358-906	. . PIN (18355)	2	
	1074744-3D117	. . SPACER (18355)	2	
	1074744-3D549	. . SPACER (18355)	2	
-69	5128660	. . BRACKET (18355)	1	
		(ATTACHING PARTS)		
	MS20365-1032	. . NUT	4	
	AN960D10	. . WASHER	4	
-70	AN3-11A	. . BOLT	1	
-71	AN3-10A	. . BOLT	1	
-72	AN3-7A	. . BOLT	2	
		----*----		
-73	AN210-2A	. . PULLEY	5	
	AN320-3	. . NUT	1	
	AN960D10	. . WASHER	1	
-74	AN23-34	. . BOLT	1	
	AN320-3	. . NUT	1	
	AN960D10	. . WASHER	1	
-75	AN23-27	. . BOLT	1	
	22D16-02	. . NUT, Spline (72962)	1	
	AN960D10	. . WASHER	1	
-76	MS20073-15	. . BOLT	1	
-77	1074744-3D203	. . SPACER (18355)	1	
-78	NAS43DD3-16	. . SPACER	1	
-79	143358-113	. . PIN (18355)	2	
-80	143358-107	. . PIN (18355)	1	
-81	143358-119	. . PIN (18355)	2	
	MS20365-1032	. . NUT	1	
	AN960D10	. . WASHER	1	
-82	NAS221-28	. . SCREW	1	
-83	5128662	. . BRACKET (18355)	1	
		(ATTACHING PARTS)		
	MS20365-1032	. . NUT	4	
	AN960D10	. . WASHER	4	
-84	AN3-7A	. . BOLT	3	
-85	AN3-6A	. . BOLT	1	
		----*----		
-86	1128853	. . PLATE (18355)	1	
-87	143358-813	. . PIN (18355)	2	
-88	143358-206	. . PIN (18355)	1	
-89	1074744-3D969	. . SPACER (18355)	1	
-90	1074744-3D593	. . SPACER (18355)	1	
-91	AN210-2A	. . PULLEY	12	
-92	1154397-4	. . STUD (18355)	1	
-93	1074744-3D1064	. . SPACER (18355)	1	
-94	1074744-3D223	. . SPACER (18355)	1	
-95	1074744-3D343	. . SPACER (18355)	1	
-96	AN960D10	. . WASHER	2	
-97	AN320-3	. . NUT	2	
-98	AN210-1A	. . PULLEY	1	
-99	AN23-42	. . BOLT	1	
-100	AN210-1A	. . PULLEY	1	
-101	1074744-3D1109	. . SPACER (18355)	1	
-102	AN960D10	. . WASHER	1	
-103	AN320-3	. . NUT	1	
-104	4128273	. . BRACKET (18355)	1	
		(ATTACHING PARTS)		
	MS20365-1032	. . NUT	1	
	AN960D10	. . WASHER	1	
-105	AN3-10A	. . BOLT	1	
-106	MS20365-1032	. . NUT	2	
	AN960D10	. . WASHER	2	
		----*----		

FIG. AND INDEX NO.	PART NUMBER	DESCRIPTION 1 2 3 4 5 6 7	UNITS PER ASSY	USABLE ON CODE
74-107	AN210-2A	. . PULLEY	2	
	AN320-3	. . NUT	1	
	AN960D10	. . WASHER	1	
-108	AN23-26	. . BOLT	1	
-109	NAS427K12	. . PIN	1	
-110	143358-107	. . PIN (18355)	1	
-111	AN210-2A	. . PULLEY	3	
-112	AN23-64	. . BOLT	1	
-113	1074744-3D1604	. . SPACER (18355)	1	
-114	AN960D10	. . WASHER	1	
-115	AN320-3	. . NUT	1	
-116	NAS427K58	. . PIN	2	
-117	AN210-1A	. . PULLEY	2	
-118	AN23-46	. . BOLT	1	
-119	1074744-3D1331	. . SPACER (18355)	1	
-120	AN960D10	. . WASHER	1	
-121	AN320-3	. . NUT	1	
-122	143358-215	. . PIN (18355)	1	
	5202641	. PEDESTAL PULLEY BRACKET INSTL, Sta 120 (18355) (for NHA see fig. 71)	REF	
-123	5128508	. . BRACKET (18355) (ATTACHING PARTS)	1	
	MS20365-1032	. . NUT	2	
	AN960D10	. . WASHER	2	
-124	AN3-6A	. . BOLT	2	
		----*----		
-125	5128507	. . BRACKET (18355) (ATTACHING PARTS)	1	
	MS20365-1032	. . NUT	5	
	AN960D10	. . WASHER	5	
-126	AN3-6A	. . BOLT	5	
		----*----		
-127	5128509	. . BRACKET UPPER PLATE (18355) (ATTACHING PARTS)	1	
	MS20365-1032	. . NUT	5	
	AN960D10	. . WASHER	5	
-128	AN3-7A	. . BOLT	3	
-129	AN3-6A	. . BOLT	2	
		----*----		
-130	5128506	. . BRACKET LOWER PLATE (18355) (ATTACHING PARTS)	1	
	MS20365-1032	. . NUT	2	
	AN960D10	. . WASHER	2	
-131	AN3-6A	. . BOLT	2	
		----*----		
-132	AN210-2A	. . PULLEY	28	
-133	1150476	. . SPACER (18355)	15	
-134	1074744-3D969	. . SPACER (18355)	4	
-135	1074744-3D1750	. . SPACER (18355)	3	
-136	1151397	. . SPACER (18355)	2	
	AN320-3	. . NUT	2	
-137	1151399-6	. . SCREW (18355)	2	
	AN320-3	. . NUT	1	
-138	1151399-4	. . SCREW (18355)	2	
	AN310-3	. . NUT	5	
-139	AN3-33	. . BOLT	5	
	AN310-3	. . NUT	2	
	AN960D10	. . WASHER	11	
-140	AN3-54	. . BOLT	2	
-141	NAS427K38	. . PIN	7	
-142	143358-423	. . PIN, Pulley guard (18355)	2	
-143	143358-429	. . PIN, Pulley guard (18355)	1	
-144	NAS427K46	. . PIN	3	
-145	143358-218	. . PIN, Pulley guard (18355)	6	

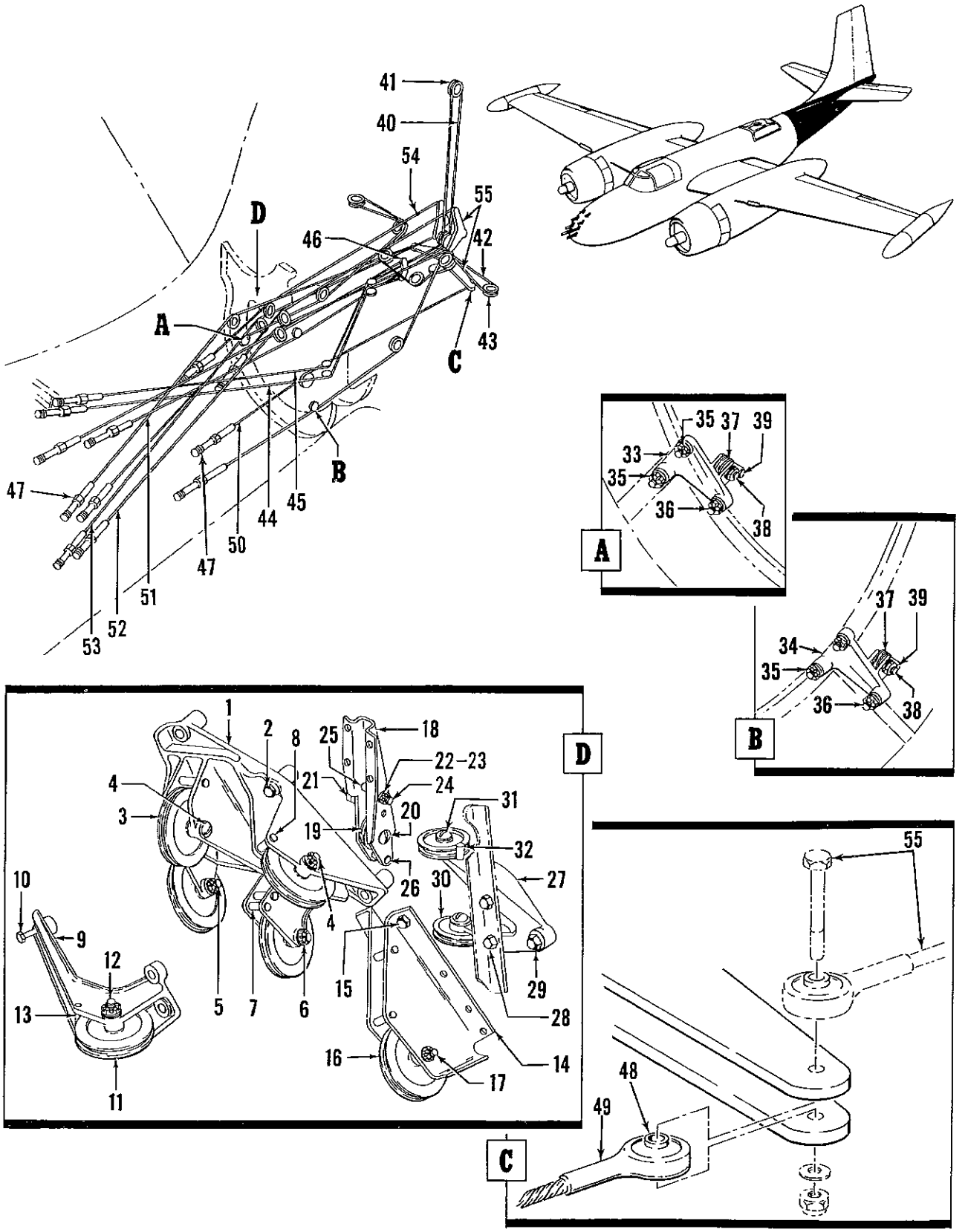

Figure 75. Fuselage Aft Section Flight Control Installation

FIG. AND INDEX NO.	PART NUMBER	DESCRIPTION 1 2 3 4 5 6 7	UNITS PER ASSY	USABLE ON CODE
75-	26-0026-1	FLIGHT CONTROL INSTL, Fuselage aft section (altered from 5153183 (18355)) (for NHA see fig. 4)	REF	
	3157878	. FLIGHT CONTROL INSTL, Fuselage sta 447 (18355)	1	
-1	5190591	. . BRACKET, Fuselage elevator pulley (18355)	1	
		(ATTACHING PARTS)		
	MS20365-428	. . NUT	4	
	AN960D416	. . WASHER	4	
-2	AN4-15A	. . BOLT	4	
		----*----		
-3	AN210-4A	. . PULLEY	4	
		(ATTACHING PARTS)		
	AN320-4	. . NUT	4	
	AN960D416	. . WASHER	4	
-4	AN24-22	. . BOLT	2	
-5	AN24-24	. . BOLT	1	
-6	AN24-25	. . BOLT	1	
		----*----		
-7	143358-103	. . PIN, Pulley guard, 1-3/32 in. long (18355)	4	
-8	143358-109	. . PIN, Pulley guard, 1-9/32 in. long (18355)	2	
-9	5159510	. . BRACKET, Fuselage, rudder pulley, nose right (18355)	1	
		(ATTACHING PARTS)		
	MS20365-1032	. . NUT	3	
	AN960D10	. . WASHER	3	
-10	AN3-10A	. . BOLT	3	
		----*----		
-11	AN210-4A	. . PULLEY	1	
		(ATTACHING PARTS)		
	AN320-4	. . NUT	1	
	AN960D416	. . WASHER	1	
	AN24-27	. . BOLT	1	
		----*----		
-13	NAS427K19	. . PIN	1	
-14	4190333	. . BRACKET ASSY, Fuselage rudder pulley, hose left (18355)	1	
		(ATTACHING PARTS)		
	MS20365-1032	. . NUT	2	
	AN960D10	. . WASHER	2	
-15	AN3-4A	. . BOLT	2	
		----*----		
-16	AN210-4A	. . PULLEY	1	
		(ATTACHING PARTS)		
	AN320-4	. . NUT	1	
	AN960D416	. . WASHER	1	
-17	AN24-15	. . BOLT	1	
		----*----		
-18	2150842	. . BRACKET, Fuselage, rudder trim pulley (18355)	1	
-19	AN210-1A	. . PULLEY	1	
		(ATTACHING PARTS)		
	AN320-3	. . NUT	1	
	AN960D10	. . WASHER	1	
-20	AN23-12	. . BOLT	1	
		----*----		
-21	1151038	. . FAIRLEAD (18355)	1	
		(ATTACHING PARTS)		
-22	MS20365-832	. . NUT	2	
-23	AN60D8	. . WASHER	2	
-24	AN515-8-20	. . SCREW	2	
-25	NAS43DD2-28	. . SPACER	2	
-26	NAS43DD4-28	. . SPACER	1	
		----*----		
-27	2150844	. . BRACKET, Fuselage, control lock pulley (18355)	1	
		(ATTACHING PARTS)		
	MS20365-1032	. . NUT	3	
	AN960D10	. . WASHER	3	
-28	AN3-10A	. . BOLT	2	
-29	AN3-14A	. . BOLT	1	
		----*----		

FIG. AND INDEX NO.	PART NUMBER	DESCRIPTION 1 2 3 4 5 6 7	UNITS PER ASSY	USABLE ON CODE
75-30	AN210-1A	. . PULLEY	2	
	AN320-3	. (ATTACHING PARTS)		
	AN320-3	. . NUT	2	
	AN23-15	. . BOLT	2	
		----*----		
-32	NAS427K12	. . PIN	2	
-33	4190206	. . BRACKET, Fuselage elevator trim pully, RH (18355)	1	
-34	4190207	. . BRACKET, Fuselage elevator trim pully, LH (18355)	1	
		(ATTACHING PARTS)		
	MS20365-1032	. . NUT	3	
	AN960-3	. . WASHER	3	
-35	AN3-6A	. . BOLT	2	
-36	AN3-7A	. . BOLT	1	
		----*----		
-37	AN210-1A	. . PULLEY	2	
		(ATTACHING PARTS)		
	AN320-3	. . NUT	2	
	AN960D10	. . WASHER	2	
-38	AN23-20	. . BOLT	2	
		----*----		
-39	NAS427K46	. . PIN	2	
	4128568-2	. DRUM ASSY, Rudder trim tab control (18355)	1	
-40	2074407-7-7-29700	. . CABLE ASSY, Swaged type, 3/32 dia. (18355)	1	
-41	2126532	. . DRUM, Rudder trim tab (18355)	1	
	4127569-2	. DRUM AND CABLE ASSY, Elevator trim tab control (18355)	1	
-42	2074407-7-7-41716	. CABLE ASSY, Swaged type, 3/32-in. dia (18355)	1	
-43	2126532	. . DRUM, Rudder trim tab (18355)	2	
-44	2074406-5-6-12200	. CABLE ASSY, Swaged type, 1/16-in. dia (control lock release) (18355)	1	
-45	2074406-5-6-11028	. CABLE ASSY, Swaged type, 1/16-in. dia (control lock lock) (18355)	1	
		(ATTACHING PARTS)		
	AN320-3	. NUT	2	
-46	AN23-10	. BOLT	2	
		----*----		
	26-9226-20	. CABLE ASSY, Dual controls (rudder nose left)	1	
	26-9226-22	. CABLE ASSY, Dual controls (rudder nose right)	1	
-47	AN669-6RH	. . TERMINAL	1	
	26-9267-1	. . END ASSY, Ball bearing swaged-type cable	1	
-48	AN200KP4	. . . BEARING	1	
-49	26-9267-3	. . . END	1	
-50	26-9226-21	. . CABLE, 3/16 dia x 104.0 (used on 26-9226-20)	1	
-51	26-9226-23	. . CABLE, 3/16 dia x 125.0 (used on 26-9226-22)	1	
-52	2074409-7-10-11410	. CABLE ASSY, Swaged type, 5/32 dia (LH elev nose down)	1	
-53	2074409-7-10-11524	. CABLE ASSY, Swaged type, 5/32 dia (RH elev nose down)	1	
		(ATTACHING PARTS FOR INDEX 53 AND 54)		
	AN320-4	. NUT	2	
	AN24-21	. SCREW	2	
		----*----		
-54	2153837-2	. CABLE ASSY, Swaged type, 5/32 dia (elev nose up)	2	
-55	26-0027-1	. FLIGHT CONTROL INSTL, Fuselage sta 474 (for details see fig. 76)	NP	

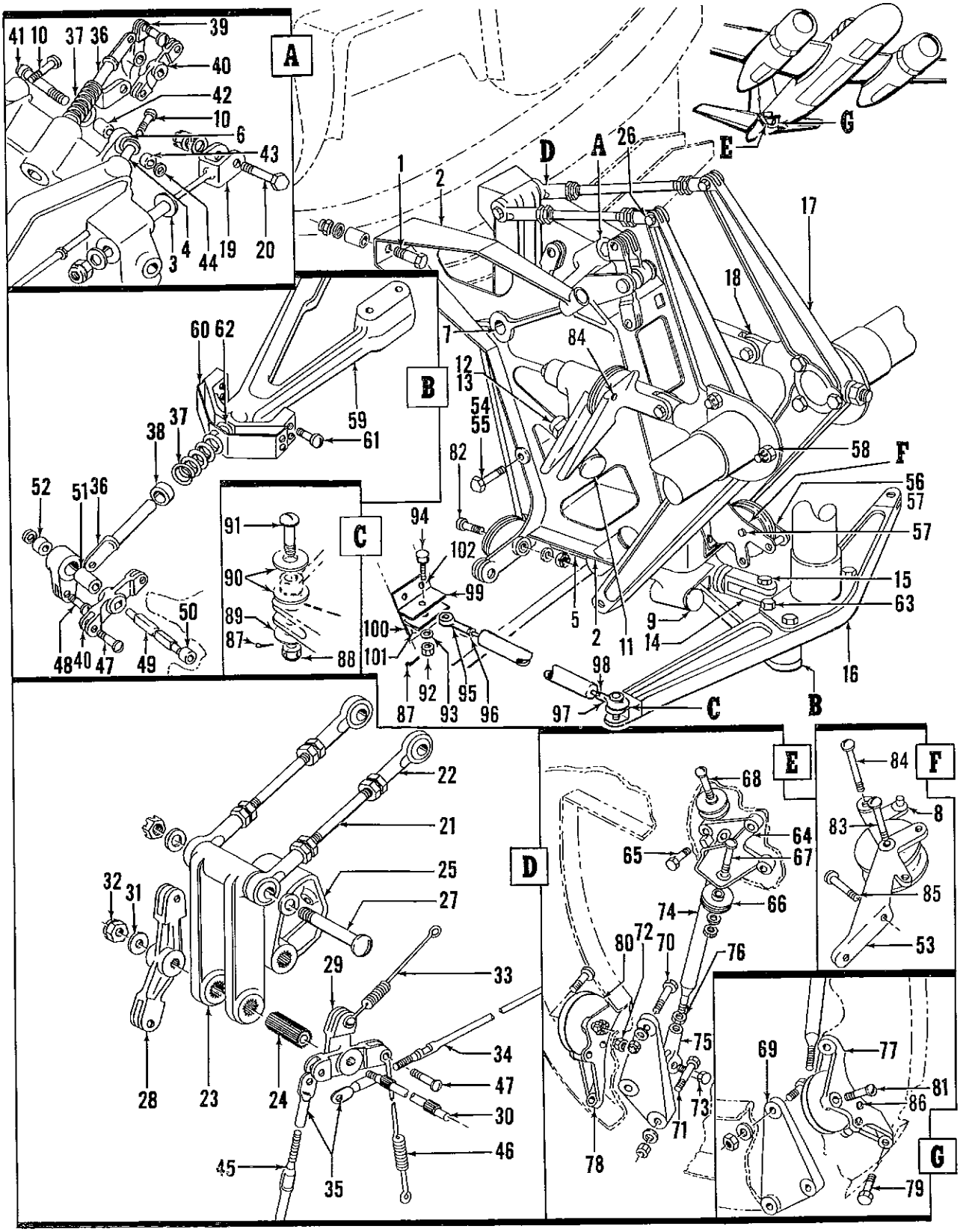

Figure 76. Fuselage Sta. 474 Flight Control Installation

FIG. AND INDEX NO.	PART NUMBER	DESCRIPTION 1 2 3 4 5 6 7	UNITS PER ASSY	USABLE ON CODE
76-	26-0027	FLIGHT CONTROL INSTL, Fuselage sta 474 (altered from 5191282 (18355)) (for NHA see fig. 75)	REF	
	5191283	. MECHANISM ASSY, Fuselage flight control (18355) (ATTACHING PARTS)	1	
	MS20365-428	. NUT	2	
	AN960-416L	. WASHER	AR	
	AN960D416	. WASHER	2	
		----*----		
	1127610	. SPACER, Fuselage instl bolt (18355) (ATTACHING PARTS)	2	
-1	AN4-31A	. BOLT	2	
		----*----		
-2	5191250	. . SUPPORT ASSY, Fuselage flight control (18355)	1	
-3	1125988	. . . BUSHING, Control horn hinge (18355)	3	
-4	1125993	. . . BUSHING, Horn stop (18355)	6	
-5	1143076	. . . BUSHING, Surface lock (18355)	2	
-6	F503-6	. . . BEARING, Oilite (70417)	1	
-7	A741-1	. . . BEARING, Oilite (70417)	1	
-8	1109566-2-8	. . . PIN, Cable guard (18355)	4	
-9	1059606-4-27	. . STOP ASSY, Fine threaded, elastic covered (18355)	2	
-10	1059606-4-24	. . STOP ASSY, Fine threaded, elastic covered (18355)	2	
-11	1059606-4-33	. . STOP ASSY, Fine threaded, elastic covered (18355)	2	
-12	AN316-4R	. . NUT	6	
-13	MS20365-428	. . NUT	6	
-14	2126658	. . CLEVIS, Rudder horn hinge support (18355)	1	
-15	AN310-6	. . NUT	1	
	5191359	. . HORN ASSY, Rudder control (18355)	1	
	5191360	. . HORN ASSY, Elevator control (18355)	2	
-16	5191359-2	. . . HORN (18355)	1	
-17	5191360-2	. . . HORN (18355)	2	
-18	AN207D5	. . . BEARING	3	
-19	2126659	. . CLEVIS, Elevator horn hinge support (18355)	2	
	MS20365-624	. . NUT	2	
-20	AN5-14	. . BOLT	3	
	124682-6S12-065	. . WASHER (18355)	3	
	AN310-5	. . NUT	3	
	2126665	. . ROD ASSY, Elevator interconnection (18355)	2	
-21	2126665-2	. . . ROD, Elevator interconnection (18355)	1	
	AN316-6R	. . . NUT	2	
-22	ARE5	. . . END, Rod (77896)	2	
	4127433	. . LINK ASSY, Elevator interconnection idler (18355)	1	
-23	4127430	. . . LINK, Elevator interconnection idler (18355)	1	
-24	1127600	. . . BEARING, Elevator idler link (18355)	1	
-25	2126662	. . . CAM, Elevator surface lock (18355)	1	
-26	AN5-21	. . BOLT	2	
	143908-010S104-062	. . WASHER (18355)	2	
	AN310-5	. . NUT	2	
-27	AN25-56	. . BOLT	1	
	143908-010S104-062	. . WASHER (18355)	2	
	AN320-5	. . NUT	1	
-28	2129327	. . BELLCRANK, Surface lock actuating (18355)	1	
-29	2126663	. . CRANK, Control surface lock actuating (18355)	1	
-30	2129266	. . SHAFT, Elevator idler link (18355)	1	
-31	143908-010S104-062	. . WASHER (18355)	1	
-32	AN310-5	. . NUT	1	
-33	1125981-2	. . SPRING, Control surface lock tension (18355)	1	
-34	1127601	. . ROD, Elevator surface lock (18355)	1	
-35	1127602	. . EYE, Special 8-36 female thread (18355)	2	
-36	1125983	. . BOLT, Control surface locking (18355)	2	
-37	1125982	. . SPRING, Control surface lock, compression (18355)	2	
-38	1127607	. . SPACER, Control surface locking bolt (18355)	2	
-39	1125998	. . LEVER, Elevator surface lock actuating (18355)	2	
-40	1125995	. . LEVER, Surface lock actuating idler (18355)	2	
-41	1127604	. . SHAFT ASSY, Elevator surface lock (18355)	1	
-42	1127606	. . SPACER, Elevator lock bearing (18355)	1	
-43	1127605	. . SPACER, Surface lock bearing (18355)	2	
-44	124682-4S10-062	. . WASHER (18355)	2	

FIG. AND INDEX NO.	PART NUMBER	DESCRIPTION 1 2 3 4 5 6 7	UNITS PER ASSY	USABLE ON CODE
76-45	1159579	. . ROD, Rudder surface lock (18355)	1	
-46	1125981-3	. . SPRING, Control surface lock tension (18355)	1	
	AN310-3	. . NUT	10	
-47	AN23-9	. . BOLT	8	
-48	AN23-10	. . BOLT	2	
-49	1127608	. . SHAFT ASSY, Rudder surface lock (18355)	1	
	1127605	. . . SPACER, Surface lock bearing (18355)	1	
-50	124682-4S10-062	. . WASHER (18355)	1	
-51	2033901-7S359-106	. . SPACER (18355)	1	
-52	1127605	. . SPACER, Surface lock bearing (18355)	2	
-53	3208268	. . BRACKET ASSY, Fuselage elevator trim tab, upper, LH (18355)	1	
	3208268-1	. . BRACKET ASSY, Fuselage elevator trim tab, upper, RH (18355)	1	
		(ATTACHING PARTS)		
	MS20365-1032	. . NUT	4	
	AN960D10	. . WASHER	4	
-54	AN3-10A	. . BOLT	2	
-55	AN3-13A	. . BOLT	2	
		----*----		
-56	2193605	. . BRACKET ASSY, Rudder trim pulley (18355)	1	
		(ATTACHING PARTS)		
	MS20365-1032	. . NUT	4	
	AN960D10	. . WASHER	4	
-57	AN3-7A	. . BOLT	4	
		----*----		
	AN310-4	. NUT	6	
	AN960D416	. WASHER	6	
-58	AN4-15	. BOLT	6	
-59	5159550	. HORN ASSY, Rudder surface lock (18355)	1	
-60	1125994	. . STRIP, Rudder surface lock rub (18355)	1	
-61	AN500A6-5	. . SCREW	4	
-62	1128701	. . BUSHING, Rudder surface lock (18355)	1	
	MS24665-2-2	. . PIN	1	
	AN310-4	. NUT	4	
	AN960D416	. WASHER	4	
-63	AN4-27	. BOLT	4	
-64	4129584	. BRACKET, Fuselage control lock pulley (18355)	1	
		(ATTACHING PARTS)		
	MS20365-1032	. NUT	3	
	AN960D10	. WASHER	3	
-65	AN3-11A	. BOLT	3	
		----*----		
-66	AN210-1A	. PULLEY	2	
	MS24665-2-2	. PIN	1	
	AN320-3	. NUT	2	
	AN960D10	. WASHER	2	
	124682-3S16-062	. WASHER (18355)	2	
-67	AN23-14	. BOLT	1	
-68	AN23-16	. BOLT	1	
-69	4190392	. BRACKET ASSY, Rod attachment, LH (18355)	1	
	4190392-1	. BRACKET ASSY, Rod attachment, RH (18355)	1	
		(ATTACHING PARTS)		
	MS20365-1032	. NUT	6	
	AN960-10L	. WASHER	6	
-70	AN3-10A	. BOLT	2	
-71	AN3-13A	. BOLT	4	
		----*----		
	2159581	. ROD ASSY, Fuselage flight control support (18355)	2	
		(ATTACHING PARTS)		
-72	MS20365-524	. NUT	2	
	AN960-516L	. WASHER	2	
-73	AN5-7A	. BOLT	2	
		----*----		
-74	2159581-4	. . ROD ASSY, Fuselage flight control, support (18355)	2	
-75	1127609	. . CLEVIS, Special thread, 5/16-in.(18355)	1	
-76	AN316-5R	. . NUT	1	
-77	4208269	. BRACKET, Fuselage elevator trim tab LH (18355)	1	

FIG. AND INDEX NO.	PART NUMBER	DESCRIPTION 1 2 3 4 5 6 7	UNITS PER ASSY	USABLE ON CODE
76-78	4208269-1	. BRACKET, Fuselage elevator trim tab, RH (18355)	1	
		(ATTACHING PARTS)		
	MS20365-1032	. NUT	4	
	AN960D10	. WASHER	4	
-79	AN3-7A	. BOLT	4	
		----*----		
-80	AN210-2A	. PULLEY	10	
		(ATTACHING PARTS)		
	MS24665-2-2	. PIN	13	
	AN320-3	. NUT	2	
	AN960-10L	. WASHER	2	
-81	AN23-20	. BOLT	2	
	AN320-3	. NUT	2	
	124682-3S16-062	. WASHER (18355)	2	
	AN960D10	. WASHER	2	
	AN960C10	. WASHER	2	
-82	AN23-22	. BOLT	2	
	AN320-3	. NUT	5	
	AN960D10	. WASHER	5	
-83	AN23-19	. BOLT	2	
-84	AN23-32	. BOLT	2	
-85	AN23-17	. BOLT	1	
		----*----		
-86	143358-027	. PIN, Pulley guard, plain (18355)	4	
	26-0133	. BUNGEE ASSY, Rudder	1	
-87	MS24665-2-2	. . PIN	2	
-88	AN320-4	. . NUT	1	
-89	AN960-416	. . WASHER	1	
-90	AN970-416	. . WASHER	2	
-91	AN24-38	. . BOLT	1	
-92	AN320-3	. . NUT	1	
-93	AN960-10	. . WASHER	1	
-94	AN23-15	. . BOLT	1	
	26-0132	. . BUNGEE ASSY	1	
-95	AN943-3	. . . ROD END	1	
-96	AN316-4R	. . . NUT	1	
-97	AN943-4	. . . ROD END	1	
-98	AN316-5R	. . . NUT	1	
-99	26-0133-1	. . BRACKET, Bungee	1	
-100	26-0133-2	. . BRACKET, Bungee	1	
		(ATTACHING PARTS FOR INDEX 99 AND 100)		
	MS20365-1032A	. . NUT	2	
	AN960-10	. . WASHER	2	
-101	AN3-12A	. . BOLT	2	
	MS20365-428A	. . NUT	2	
	AN960-416	. . WASHER	2	
-102	AN4-12A	. . BOLT	2	
		----*----		

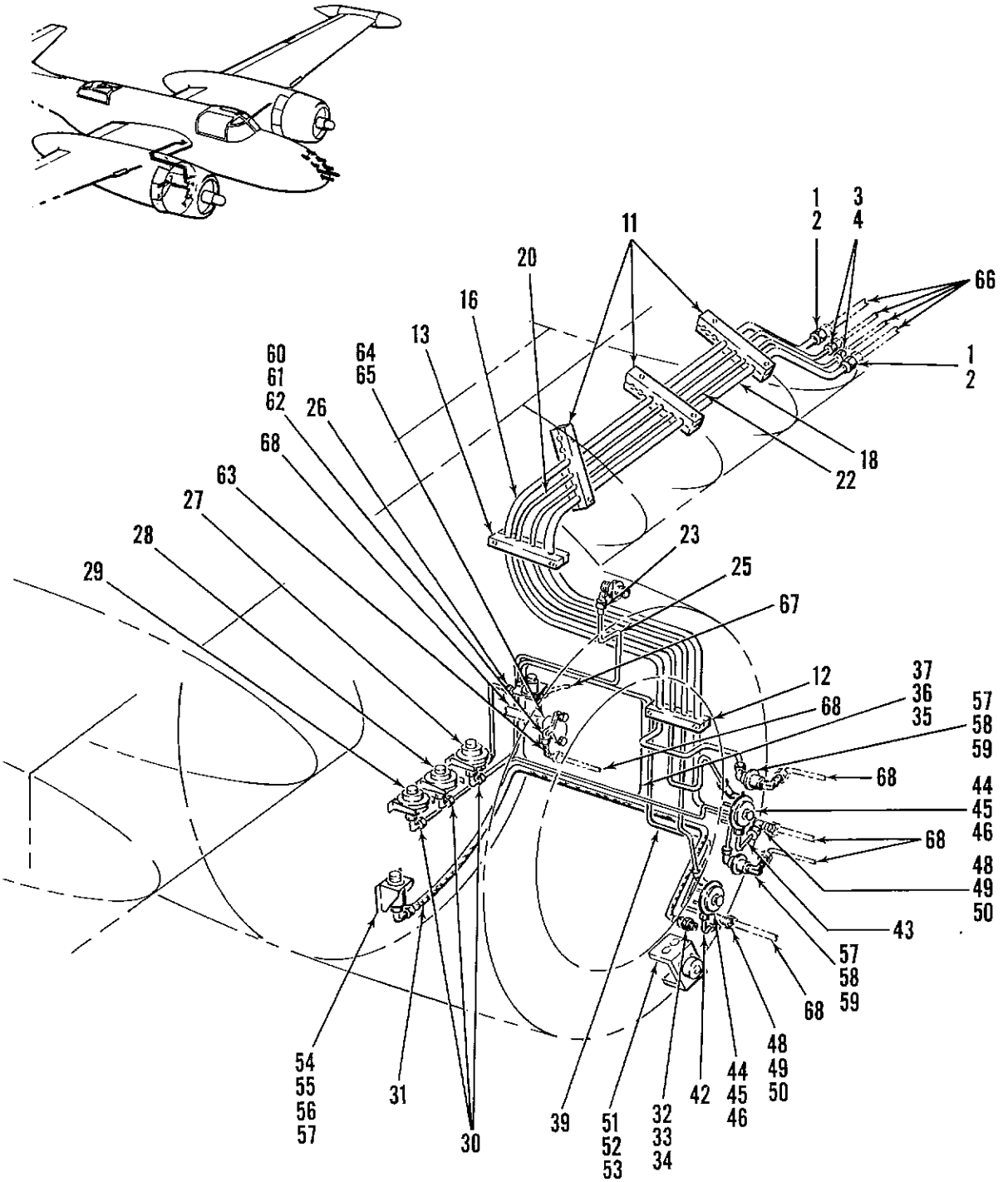

Figure 77. LH and RH Wing Instrumentation Installations (Sheet 1 of 2)

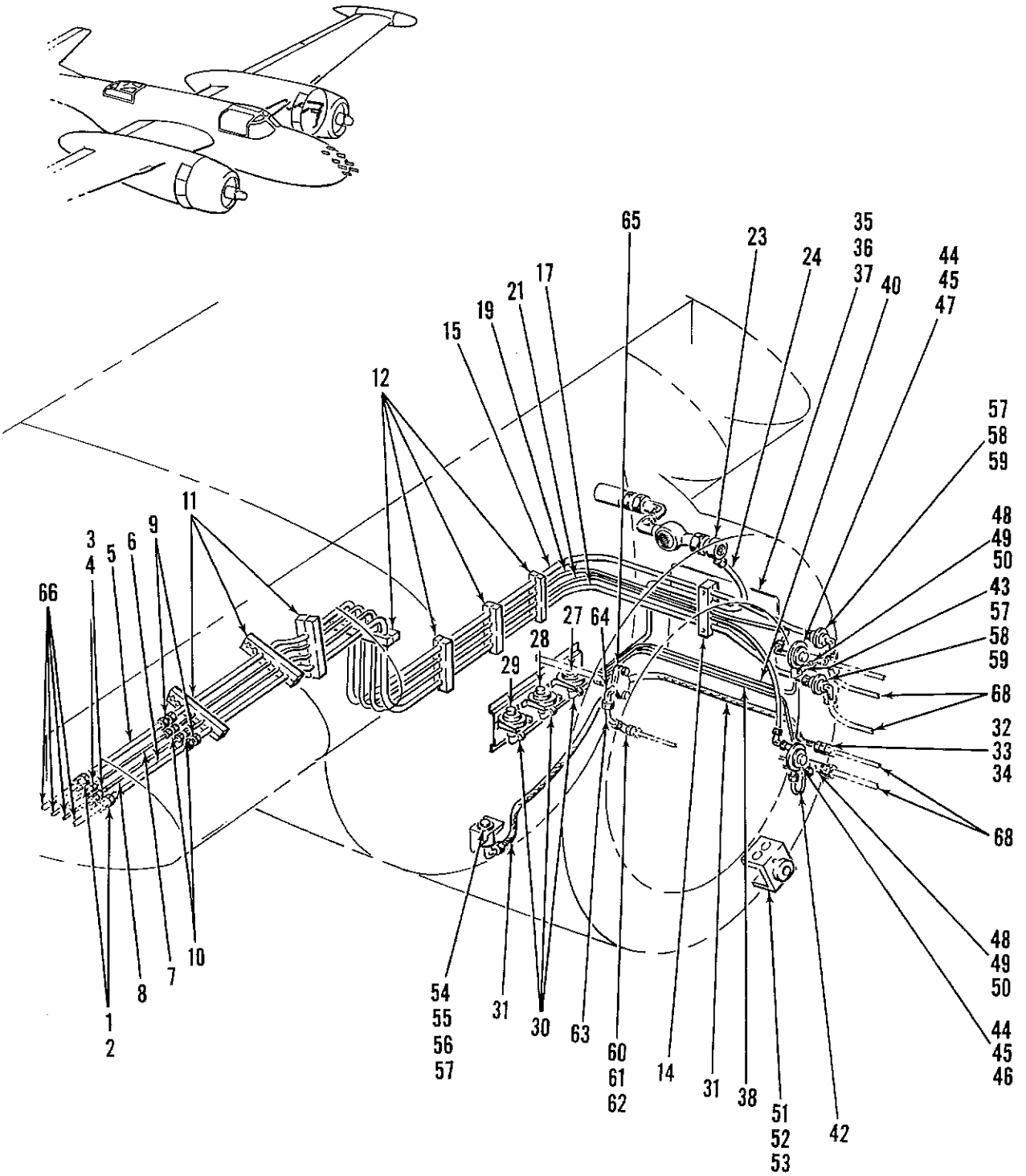

Figure 77. LH and RH Wing Instrumentation Installations (Sheet 2 of 2)

FIG. AND INDEX NO.	PART NUMBER	DESCRIPTION 1 2 3 4 5 6 7	UNITS PER ASSY	USABLE ON CODE
77-	26-9650-1	INSTRUMENTATION INSTL, Wing, LH (for NHA see fig. 3)	REF	
	26-9650-2	INSTRUMENTATION INSTL, Wing, RH (for NHA see fig. 3)	REF	
-1	AN815-4D	. UNION	2	
-2	AN960-716	. WASHER	4	
-3	AN815-2D	. UNION	2	
-4	AN960-416	. WASHER	4	
-5	26-9650-16	. TUBE ASSY, (LH only)	1	
-6	26-6007-153	. TUBE ASSY, (LH only)	1	
	AN818-4D	. . NUT	4	
	MS20819-4D	. . SLEEVE	4	
-7	26-6008-110	. TUBE ASSY, (LH only)	1	
-8	26-6007-148	. TUBE ASSY, (LH only)	1	
	AN818-2D	. . NUT	4	
	MS20819-2D	. . SLEEVE	4	
-9	AN815-4D	. UNION (LH only)	2	
-10	AN815-2D	. UNION (LH only)	2	
-11	2192765	. CLAMP ASSY, Bonded block (18355)	3	
		(ATTACHING PARTS)		
	NAS601-24P	. SCREW	6	
	AN960-6	. WASHER	6	
		----*----		
-12	26-6012-1	. SUPPORT ASSY, Tubing (LH only)	4	
	26-6012-1	. SUPPORT ASSY, Tubing (RH only)	1	
-13	26-6013-1	. SUPPORT ASSY, Tubing (RH only)	1	
-14	26-6011-1	. SUPPORT ASSY, Tubing (LH only)	1	
-15	26-9650-18	. TUBE ASSY, (LH only)	1	
-16	26-9650-24	. TUBE ASSY, (RH only)	1	
-17	26-6007-155	. TUBE ASSY, (LH only)	1	
-18	26-6007-160	. TUBE ASSY, (RH only)	1	
	AN818-4D	. . NUT	8	
	MS20819-4D	. . SLEEVE	8	
-19	26-6008-108	. TUBE ASSY, (LH only)	1	
-20	26-6008-116	. TUBE ASSY, (RH only)	1	
-21	26-6007-150	. TUBE ASSY, (LH only)	1	
-22	26-6007-159	. TUBE ASSY, (RH only)	1	
	AN818-2D	. . NUT	8	
	MS20819-2D	. . SLEEVE	8	
-23	26-9650-40	. FITTING ASSY (Altered from AN815-16D and MS20823-4D)	1	
-24	26-9650-21	. TUBE ASSY, (LH only)	1	
-25	26-9650-23	. TUBE ASSY, (RH only)	1	
	AN818-4D	. . NUT	4	
	MS20819-4D	. . SLEEVE	4	
-26	MS20826-4D	. TEE (RH only)	1	
-27	32V20	. SWITCH ASSY, Vacuum press. warning (09049)	1	
		(alt M410EG10A67 (81818))		
-28	1G143	. SWITCH ASSY, Oil press. warning (09049)	1	
		(alt M410EG32A66 (81818))		
-29	1G142	. SWITCH ASSY, Fuel press. warning (09049)	1	
		(alt M410EG10A1 (81818))		
		(ATTACHING PARTS FOR ITEMS 27, 28 and 29)		
	AN526-1032R10	. SCREW	6	
		----*----		
-30	MS20822-4D	. ELBOW	3	
-31	26-9650-22	. HOSE ASSY, Rubber	1	
-32	AN924-4	. NUT	1	
-33	AN960-716	. WASHER	2	
-34	AN832-4	. UNION	1	
-35	26-8111-25	. SUPPORT ASSY (LH only)	1	
	26-8111-26	. SUPPORT ASSY (RH only)	1	
		(ATTACHING PARTS)		
-36	AN3-5A	. BOLT	4	
-37	AN526-1032-8	. SCREW	4	
	AN960D10	. WASHER	8	
		----*----		

FIG. AND INDEX NO.	PART NUMBER	DESCRIPTION 1 2 3 4 5 6 7	UNITS PER ASSY	USABLE ON CODE
77-38	26-6007-132	. TUBE ASSY, (LH only)	1	
-39	26-6007-157	. TUBE ASSY, (RH only)	1	
-40	26-6008-104	. TUBE ASSY, (LH only)	1	
-41	26-6008-114	. TUBE ASSY, (RH only)	1	
-42	26-6007-133	. TUBE ASSY	1	
-43	26-6008-112	. TUBE ASSY	1	
	AN818-4D	. . NUT	16	
	MS20819-4D	. . SLEEVE	16	
-44	AN5765-1	. TRANSMITTER ASSY, Fuel and oil pressure (for details see T. O. 5P5-3-2-1)	2	
-45	AN816-4	. NIPPLE	2	
-46	MS20823-2D	. ELBOW (LH only)	1	
	MS20823-2D	. ELBOW (RH only)	2	
-47	MS20822-2D	. ELBOW (LH only)	1	
-48	AN924-4	. NUT	2	
-49	AN960-716	. WASHER	4	
-50	AN804-4	. TEE	2	
-51	9054-5A	. TRANSMITTER ASSY, Fuel flowmeter (19315)	1	
		(ATTACHING PARTS)		
	MS20365-832	. NUT	3	
	J2049-2D	. WASHER (76005)	3	
	AN3-10A	. BOLT	3	
		----*----		
-52	26-8111-17	. BRACKET ASSY	1	
-53	150PL18	. MOUNT, Resilient (76005)	3	
		(ATTACHING PARTS)		
	AN3-4A	. BOLT	6	
		----*----		
-54	ST2G	. TRANSMITTER ASSY, Press. (BMEP)(61349) (for details see T. O. 5P5-3-35-1)	1	
		(ATTACHING PARTS)		
	AN4-7	. BOLT	4	
		----*----		
-55	100PL1	. MOUNT, Resilient (76005)	4	
-56	26-8111-11	. BRACKET ASSY, BMEP Transmitter	1	
		(ATTACHING PARTS)		
	NAS220-13	. BOLT	4	
	J2049-2D	. WASHER (76005)	4	
		----*----		
-57	MS20823-4D	. ELBOW	4	
-58	MS20822-4	. ELBOW	2	
-59	1066151	. COUPLING (18355)	2	
		(ATTACHING PARTS)		
	MS20365-440	. NUT	10	
	AN960-4	. WASHER	10	
	AN515-4-7	. SCREW	10	
		----*----		
-60	AN924-4	. NUT	1	
-61	AN960-716	. WASHER	2	
-62	AN833-4	. ELBOW	1	
-63	26-9650-20	. TUBE ASSY, Metal	1	
-64	MS20822-4D	. ELBOW	1	
-65	22005-4A1-1	. TRANSMITTER ASSY, Water press. (19315) (for details see T. O. 5P3-4-16-14)	1	
		(ATTACHING PARTS)		
	MS20365-428	. NUT	2	
	AN960-416	. WASHER	2	
	AN4-10A	. BOLT	2	
		----*----		
-66		INSTRUMENT INSTL, Fuselage (see fig. 78)	REF	
-67		WATER INJECTION SYSTEM INSTL (see fig. 14)	REF	
-68		FOR CONTINUATION SEE T. O. 1B-26K-10	REF	

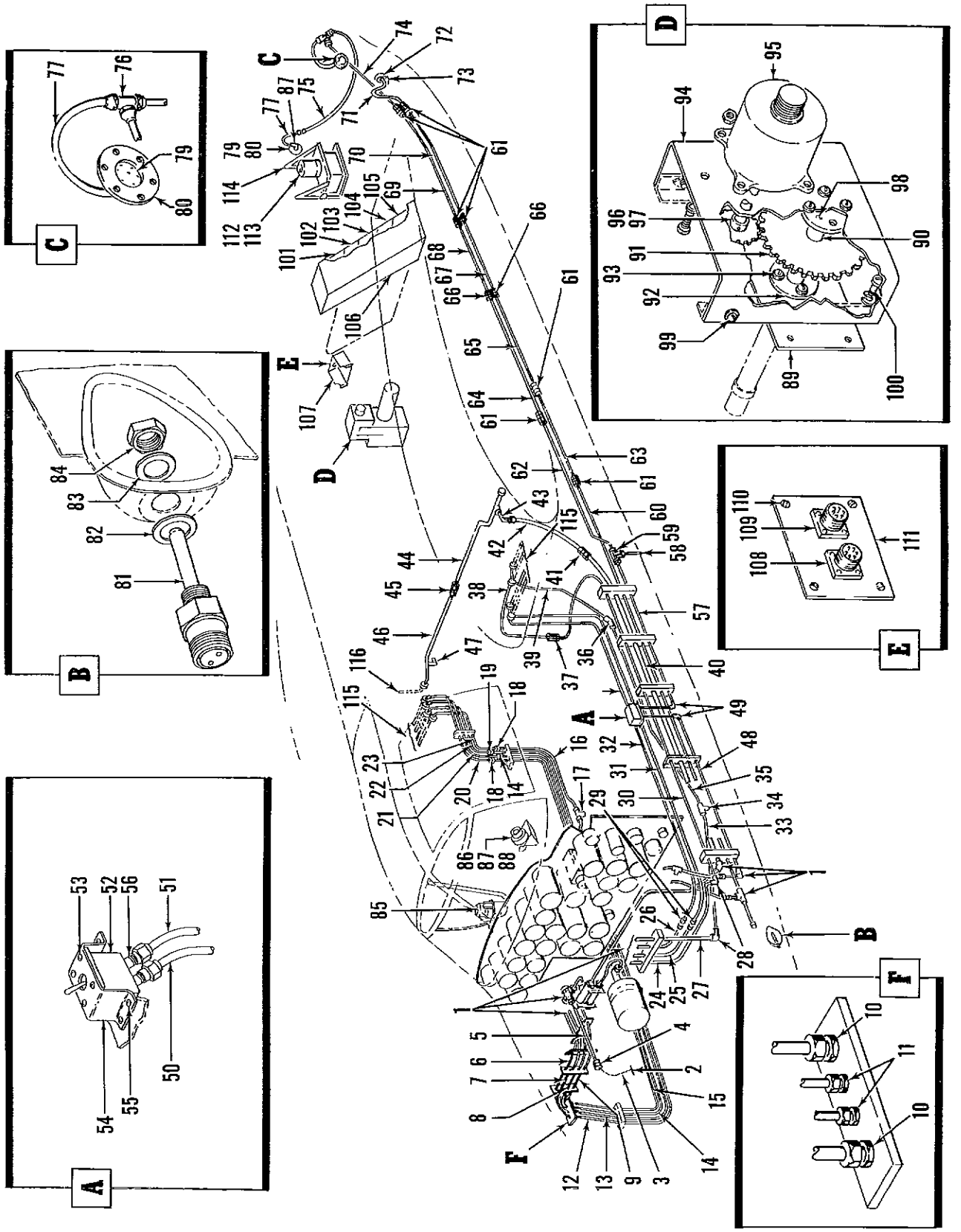

Figure 78. Fuselage Section Instrument Installation

FIG. AND INDEX NO.	PART NUMBER	DESCRIPTION 1 2 3 4 5 6 7	UNITS PER ASSY	USABLE ON CODE
78-	26-9651	INSTRUMENT INSTL, Fuselage section (altered from 5208214 and . . . . 5207534 (18355)) (for NHA see fig. 4)	REF	
-1	26-9652-1	. INSTRUMENT INSTL, Pilots compartment (for details see fig. 80) .	1	
-2	AN416-2	. PIN	1	
-3	COML	. CHAIN, Weldless, size 00	AR	
-4	AN929A6D	. CAP	1	
-5	26-9651-3	. TUBE	1	
-6	5195445-68	. TUBE ASSY (18355)	1	
-7	5195445-92	. TUBE ASSY (18355)	1	
-8	5195445-102	. TUBE ASSY (18355)	1	
-9	5195445-74	. TUBE ASSY (18355)	1	
-10	AN832-4D	. UNION	2	
	AN924-4D	. NUT	2	
	MS28778-4	. PACKING	2	
-11	AN832-2D	. UNION	2	
	AN924-2D	. NUT	2	
	MS28778-2	. PACKING	2	
-12	5195445-72	. TUBE ASSY (18355)	1	
-13	5195445-138	. TUBE ASSY (18355)	1	
-14	5195445-136	. TUBE ASSY (18355)	1	
-15	5195445-66	. TUBE ASSY (18355)	1	
-16	5195445-118	. TUBE ASSY (18355)	1	
-17	AN824-4D	. TEE	1	
	AN929-4D	. CAP	1	
-18	AN815-4D	. UNION	2	
-19	AN815-2D	. UNION	2	
-20	5195445-124	. TUBE ASSY (18355)	1	
-21	5195445-128	. TUBE ASSY (18355)	1	
-22	5195445-126	. TUBE ASSY (18355)	1	
-23	5195445-130	. TUBE ASSY (18355)	1	
-24	5195445-82	. TUBE ASSY (18355)	1	
-25	5195445-110	. TUBE ASSY (18355)	1	
-26	5195445-106	. TUBE ASSY (18355)	1	
-27	5195445-90	. TUBE ASSY (18355)	1	
-28	AN833-4D	. ELBOW	2	
-29	AN815-2D	. UNION	2	
-30	5195445-80	. TUBE ASSY (18355)	1	
-31	5195445-142	. TUBE ASSY (18355)	1	
-32	5195445-140	. TUBE ASSY (18355)	1	
-33	5195445-88	. TUBE ASSY (18355)	1	
-34	AN824-4D	. TEE	1	
-35	5195445-86	. TUBE ASSY (18355)	1	
-36	AN833-4D	. ELBOW	1	
-37	AN815-4D	. UNION	1	
-38	5195445-76	. TUBE ASSY (18355)	1	
-39	5195445-84	. TUBE ASSY (18355)	1	
-40	26-9651-5	. TUBE	1	
-41	AN815-12D	. UNION	1	
-42	26-9651-7	. TUBE	1	
-43	MS20822-12D	. ELBOW	1	
-44	26-9651-9	. TUBE	1	
-45	AN815-16D	. UNION	1	
-46	26-9651-11	. TUBE	1	
-47	MS20822-8D	. ELBOW	1	
-48	5195445-146	. TUBE ASSY (18355)	1	
-49	AN833-4D	. ELBOW	2	
-50	5195445-148	. TUBE ASSY (18355)	1	
-51	5195445-150	. TUBE ASSY (18355)	1	
	5207834	. VALVE INSTL, Static press, selector (18355)	1	
-52	AN5831-1	. . VALVE	1	
		(ATTACHING PARTS)		
-53	AN515-6-10	. . SCREW	4	
	AN960D6L	. . WASHER	4	
		----*----		
-54	4207835	. . BRACKET, Static press selector valve (18355)	1	
		(ATTACHING PARTS)		
	A1181-6Z1	. . NUT, Self-locking, hexagon (18355)	4	
	AN960-6	. . WASHER	4	
-55	AN530-6R10	. . SCREW	4	
		----*----		

FIG. AND INDEX NO.	PART NUMBER	DESCRIPTION 1 2 3 4 5 6 7	UNITS PER ASSY	USABLE ON CODE
78-56	AN824-4D	. . TEE	2	
-57	5195445-144	. TUBE ASSY (18355)	1	
-58	5195445-168	. TUBE ASSY (18355)	1	
-59	AN824-4D	. TEE	1	
-60	5195445-28	. TUBE ASSY (18355)	1	
-61	AN815-4D	. UNION	7	
-62	5195445-52	. TUBE ASSY (18355)	1	
-63	5195445-116	. TUBE ASSY (18355)	1	
-64	5195445-54	. TUBE ASSY (18355)	1	
-65	5195445-34	. TUBE ASSY (18355)	1	
-66	AN832-4D	. UNION	2	
-67	5195445-36	. TUBE ASSY (18355)	1	
-68	5195445-56	. TUBE ASSY (18355)	1	
-69	5195445-58	. TUBE ASSY (18355)	1	
-70	5195445-38	. TUBE ASSY (18355)	1	
-71	26-9651-15	. HOSE ASSY (ALT AN6290-4-14)	1	
	26-1751-1	. BRACKET INSTL, Vgh provisions	NP	
-72	75G32	. . SWITCH, Pressure (Custom Component Switches Inc., Chatsworth, Calif)	1	
		(ATTACHING PARTS)		
	MS20365-1032	. . NUT	3	
	AN960-10	. . WASHER	3	
		----*----		
-73	26-1751-5	. . BRACKET, Pressure switch mounting	1	
		(ATTACHING PARTS)		
	MS20365-1032	. . NUT	4	
	AN960-10	. . WASHER	4	
	AN3-6A	. . BOLT	3	
	AN3-10A	. . BOLT	1	
		----*----		
-74	2155106-8	. TUBE ASSY (18355)	1	
-75	26-9651-13	. TUBE	1	
-76	AN824-4D	. TEE	1	
-77	AN6270-4	. HOSE ASSY	2	
-78	MS20823-4D	. ELBOW	2	
-79	42A13995	. TUBE, Static pressure (GFE)	1	
-80	42A11521	. PLATE, Static pressure tube reinforcing (GFE)	1	
	5195537	. TEMPERATURE BULB INSTL	NP	
-81	AN5525-1	. . BULB, Thermometer	1	
-82	143908-020D100-032	. . WASHER (18355)	1	
-83	143908-018SR104-093	. . WASHER (18355)	1	
-84	MS20365-1018	. . NUT	1	
-85	C2400L4VT	. COMPASS, Magnetic, pilot's standby, type MB-1 (70214) (for details see T.O. 5N3-3-2-1)	1	
	5207782	. DRIFTMETER INSTL (18355)	1	
-86	NO NUMBER	. . DRIFTMETER, Type B5 (19315) (for details see T.O. 5N7-3-2-1)	1	
-87	4207728	. . BRACKET ASSY, Driftmeter (18355)	1	
-88	980W5-13	. . STUD (78189)	4	
	98-5CP	. . PIN (78189)	4	
	5206588	. TRANSMITTER INSTL, Wing flap position (18355)	1	
-89	2206589	. . SUPPORT, Transmitter drive shaft bushing (18355)	1	
-90	1206591	. . SHAFT, Transmitter drive (18355)	1	
-91	2209011	. . GEAR, Transmitter (18355)	1	
-92	2206592	. . BUSHING, Transmitter (18355)	1	
	MS20365-440	. . NUT	4	
-93	AN515-4-6	. . SCREW	4	
	4206593	. . COVER ASSY, Transmitter (18355)	1	
-94	4206594	. . . COVER	1	
-95	8TJ9PAV	. . . TRANSMITTER (24446) (for details see T.O. 5P3-3-1-44)	1	
-96	2209010	. . . GEAR, Transmitter (18355)	1	
-97	AN565D6-3	. . . SETSCREW	2	
-98	2206595	. . BEARING, Transmitter	1	
-99	AN530-8-6	. . SCREW	4	
	AN960D6L	. . WASHER	4	
-100	AN503-10-8	. . SCREW	4	
	AN935-10L	. . WASHER	4	

FIG. AND INDEX NO.	PART NUMBER	DESCRIPTION 1 2 3 4 5 6 7	UNITS PER ASSY	USABLE ON CODE
78-	26-10018-1	. INSTRUMENT INSTL, Camera control, fus sta 253.69	NP	
-101	26-2660-5	. . PANEL (KA56)	1	
-102	26-2660-7	. . PANEL (F477 primary)	1	
-103	26-2660-9	. . PANEL (F477 secondary)	1	
-104	26-2660-13	. . PANEL (K2)	1	
-105	26-2660-11	. . PANEL (K38)	1	
-106	26-2660-1	. . PANEL ASSY, Camera console	1	
		(ATTACHING PARTS)		
	MS20365-832	. . NUT	10	
	AN960-8	. . WASHER	10	
	AN509-8R9	. . SCREW	10	
	MS20365-1032	. . NUT	8	
	AN960-10	. . WASHER	8	
	AN3-5A	. . BOLT	8	
		----*----		
-107	26-2745	. . BRACKET ASSY, Control panel, A6 ejector	1	
		(ATTACHING PARTS)		
	MS20365-1032A	. . NUT	7	
	AN960-10	. . WASHER	7	
	AN3-4A	. . BOLT	7	
		----*----		
-108	2182-7	. . . RECEPTACLE, Dummy (71468)	1	
-109	2182-4	. . . RECEPTACLE, Dummy (71468)	1	
-110	PFSC3-1-2-38	. . . FASTENER (72794)	4	
-111	26-2745-2	. . . PANEL	1	
	26-4642-1	. K4B AND GYRO INSTL	NP	
-112	673447	. . COMPASS SYSTEM, Slaved gyro magnetic, type J1	1	
		(gyroscope compass model C2) (07187)		
		(for details see T.O. 5N1-2-1-34)		
		(ATTACHING PARTS)		
	MS20365-428	. . NUT	6	
	AN960-416L	. . WASHER	6	
-113	736329-2	. . VIBRATION ISOLATOR (07187)	3	
	MS20365-1032	. . NUT	4	
	AN960-10	. . WASHER	8	
	NAS221-10	. . SCREW	4	
		----*----		
-114	103324-01	. . RACK, Gyro amplifier (03851)	1	
-115		. WING INSTRUMENT INSTL (See fig. 77)	REF	
-116		. ANTI-ICING INSTL (See fig. 16)	REF	

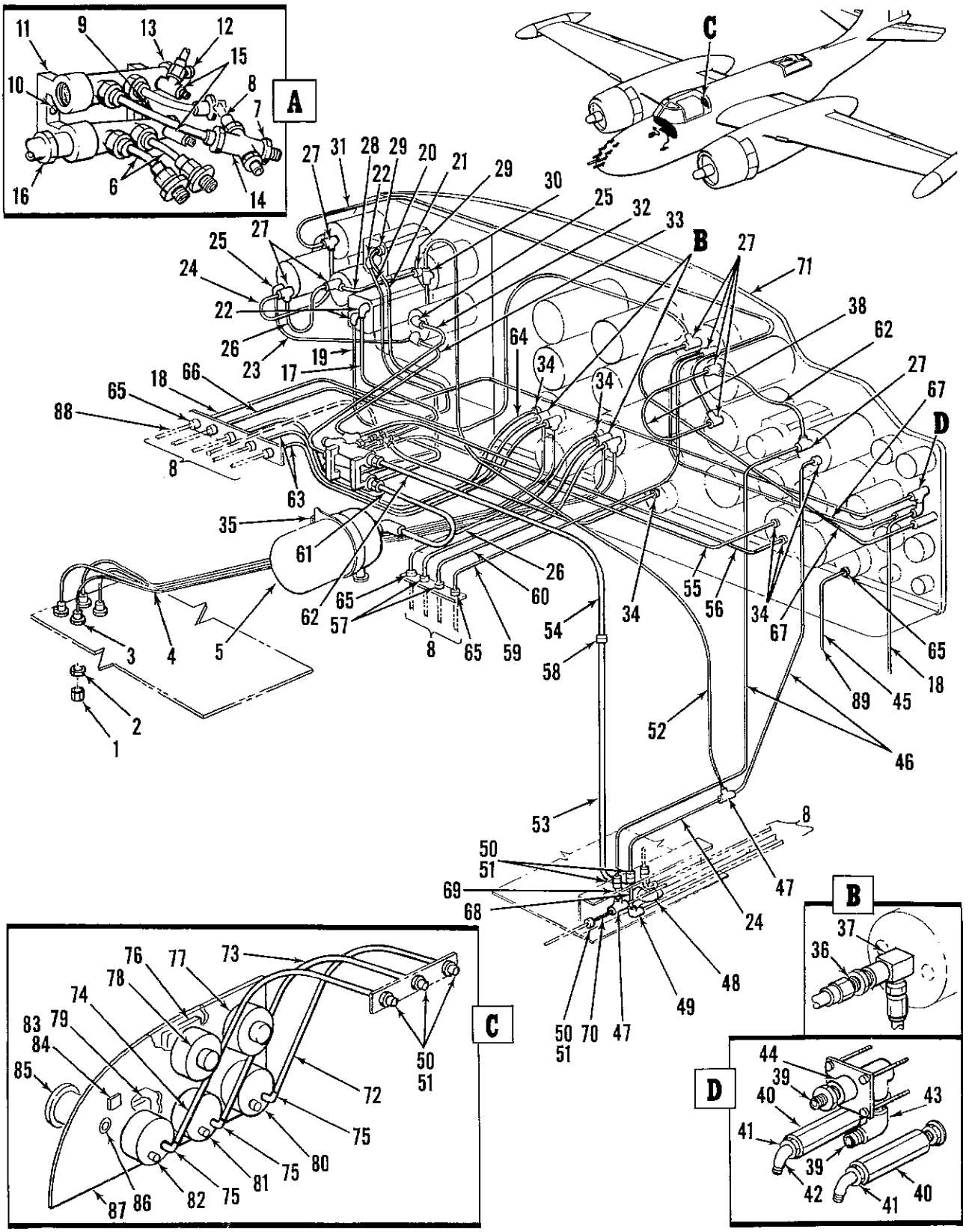

Figure 79. Pilots Compartment Instrument Installation

FIG. AND INDEX NO.	PART NUMBER	DESCRIPTION 1 2 3 4 5 6 7	UNITS PER ASSY	USABLE ON CODE
79-	26-9652-1	INSTRUMENT INSTL, Pilot's compartment (for NHA see fig. 78)	REF	
-1	AN929-2D	. CAP	4	
-2	AN924-2D	. NUT	4	
-3	AN837-2D	. ELBOW	4	
-4	AN6270-2-38	. HOSE ASSEMBLY	4	
-5	27300	. FILTER, Air (for details see T.O. 6R2-14-3)	1	
-6	26-9653-4	. TUBE ASSY	2	
-7	AN815-6D	. UNION	11	
-8		. FUSELAGE SECTION INSTRUMENT INSTL (See fig. 78)	REF	
-9	26-9653-5	. TUBE ASSY	2	
	4154193	. MANIFOLD ASSY, Fuselage instrument vacuum (18355)	1	
		(ATTACHING PARTS)		
	MS20365-1032	. NUT	2	
-10	AN520-10-12	. SCREW	2	
		----*----		
-11	4154193-2	. . MANIFOLD, Fuselage instrument vacuum (18355)	1	
-12	38A6136	. . NEEDLE, Instrument vacuum control valve adjusting (18355)	1	
-13	38A6135	. . NUT, Instrument vacuum control valve lock (18355)	1	
-14	AN918-6D	. CROSS	1	
-15	AN824-6D	. TEE	2	
-16	AN816-12D	. NIPPLE	2	
-17	AN6270-6-30	. HOSE ASSY	1	
-18	AN6270-4-27	. HOSE ASSY	2	
-19	AN6270-6-34-1-2	. HOSE ASSY	1	
-20	AN6270-6-35	. HOSE ASSY	1	
-21	AN6270-6-36	. HOSE ASSY	1	
-22	MS20822-6D	. ELBOW	3	
-23	AN6270-4-21	. HOSE ASSY	1	
-24	AN6270-4-8-1-2	. HOSE ASSY	2	
-25	MS20822-4D	. ELBOW	3	
-26	AN6270-4-25	. HOSE ASSY	2	
-27	MS20826-4D	. TEE	8	
-28	AN6270-4-14-1-2	. HOSE ASSEMBLY	1	
-29	AN816-6D	. NIPPLE	2	
-30	MS20825-4D	. TEE	1	
-31	AN6270-4-59	. HOSE ASSY	1	
-32	AN6270-4-33-1-2	. HOSE ASSY	1	
-33	AN6270-4-32-1-2	. HOSE ASSY	1	
-34	AN816-4D	. NIPPLE	6	
-35	26-9517-1	. CLIP, Instrument lines, sta 8	1	
		(ATTACHING PARTS)		
	MS20365-1032	. NUT	2	
	AN960-10	. WASHER	2	
	AN526-1032R4	. SCREW	2	
		----*----		
-36	AN816-2	. NIPPLE	4	
-37	AN5765-3	. GAGE FITTING AND BLEED CHECK VALVE	4	
-38	AN6270-4-8-1-2	. HOSE ASSEMBLY	1	
-39	AN816-2D	. NIPPLE	1	
-40	4896W1700-18E	. VALVE, Purge (79318)	2	
-41	AN912-2D	. BUSHING	2	
-42	MS20823-2D	. ELBOW	2	
-43	MS20822-2D	. UNION	1	
-44	12306	. VALVE (00502)	1	
		(ATTACHING PARTS)		
	AN515B6R16	. SCREW	4	
		----*----		
-45	MS28759-4-18-1-2	. HOSE ASSY	1	
-46	AN6270-4-20	. HOSE ASSY	2	
-47	AN824-4D	. TEE	2	
-48	AN829-12D	. ELBOW	1	
-49	AN821-12D	. ELBOW	1	
-50	AN924-4D	. NUT	6	
-51	AN832-4D	. UNION	6	
-52	AN6270-4-69	. HOSE ASSY	1	
-53	26-9653-1	. TUBE ASSY	1	
-54	26-9653-3	. TUBE ASSY	1	

FIG. AND INDEX NO.	PART NUMBER	DESCRIPTION 1 2 3 4 5 6 7	UNITS PER ASSY	USABLE ON CODE
79-55	AN6270-2-19-1-2	. HOSE ASSY	1	
-56	AN6270-2-20-1-2	. HOSE ASSEMBLY	1	
-57	AN815-2D	. UNION	2	
-58	AN815-12D	. UNION	1	
-59	AN6270-4-18-3-4	. HOSE ASSY	1	
-60	AN6270-2-25	. HOSE ASSY	2	
-61	26-9653-2	. TUBE ASSY	1	
-62	AN6270-4-10-1-2	. HOSE ASSY	2	
-63	AN6270-2-19	. HOSE ASSY	2	
-64	AN6270-4-19	. HOSE ASSY	1	
-65	AN815-4D	. UNION	8	
-66	AN6270-4-24	. HOSE ASSY	1	
-67	AN6270-4-32-1-2	. HOSE ASSY	2	
-68	26-9653-7	. TUBE ASSY	1	
-69	26-9653-8	. TUBE ASSY	1	
-70	26-9653-9	. TUBE ASSY	1	
-71	26-5600-1	. PANEL INSTL, Main instrument (for details see fig. 80)	1	
-72	MS28759-4-12	. HOSE ASSY	1	
-73	AN6270-4-13	. HOSE ASSY	1	
-74	MS28759-4-14	. HOSE ASSY	1	
-75	AN821-4D	. ELBOW	3	
	26-5602-400	. PANEL ASSY, Pilots aft instrument, fus sta 90	1	
		(ATTACHING PARTS)		
	A8943-632-24J	. CLIP (60380)	20	
	AN507-1032R6	. SCREW	20	
	AN507B8R8	. SCREW	4	
		----*----		
-76	B4755C	. LIGHT, Eyebrow (72914)	2	
		(ATTACHING PARTS)		
	AN507B6R14	. SCREW	4	
		----*----		
-77	26-5033-1	. INDICATOR ASSY, ADI Quantity (altered from 8DJ20ADC (24446))	1	
-78	26-5034-1	. INDICATOR, Ferry tank fuel (altered from 8DJ20ACY (24446))	1	
		(ATTACHING PARTS)		
	AN515B6R12	. SCREW	4	
		----*----		
-79	B4750C	. LIGHT, Eyebrow (72914)	3	
		(ATTACHING PARTS)		
	AN507B6R14	. SCREW	6	
		----*----		
-80	26-5035-1	. INDICATOR, Emergency air pressure (altered from AN5771-4)	1	
-81	26-5037-1	. INDICATOR, De-icer pressure (altered from AN5771-8)	1	
-82	26-5036-1	. INDICATOR, Gun charger air pressure (altered from AN5771-4)	1	
		(ATTACHING PARTS)		
	AN515B6R12	. SCREW	6	
		----*----		
-83	MS25226-2-2	. BUS	1	
-84	MS25123-1-2	. TERMINAL BOARD	1	
		(ATTACHING PARTS)		
	MS20365-440	. NUT	2	
	AN507B4R4	. SCREW	2	
		----*----		
-85	MS25222-1	. SIGNAL, Emergency warning	1	
		(ATTACHING PARTS)		
	MS20365-832	. NUT	3	
	AN960-8	. WASHER	6	
	AN5268R10	. SCREW	3	
		----*----		
-86	AN931A4-7	. GROMMET	1	
-87	26-5602-1	. PANEL	1	
-88		. ANTI-ICING SYSTEM INSTL (See fig. 16)	REF	
-89		. WINDSHIELD WIPER INSTL (See fig. 22)	REF	

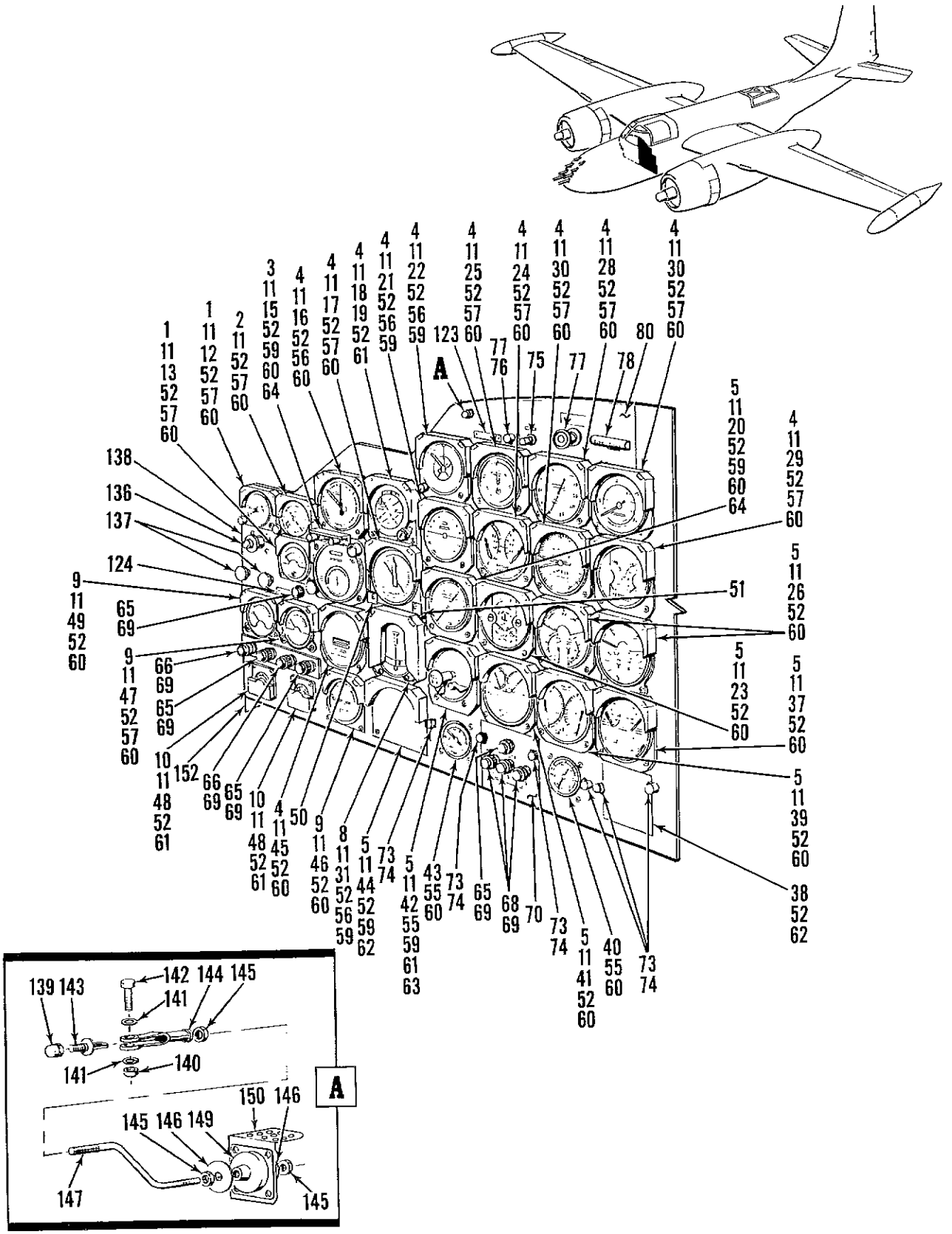

Figure 80. Main Instrument Panel Installation (Sheet 1 of 2)

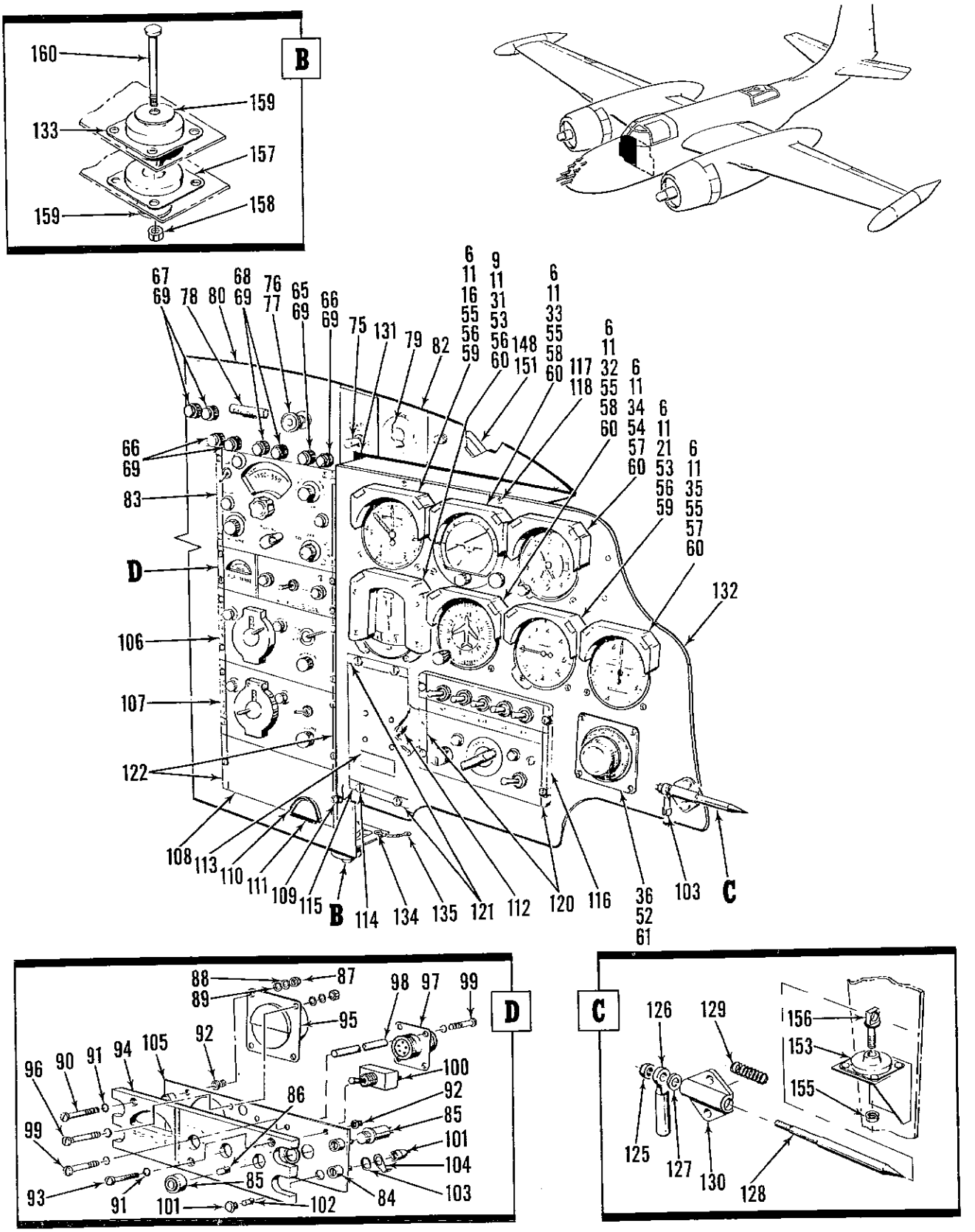

Figure 80. Main Instrument Panel Installation (Sheet 2 of 2)

FIG. AND INDEX NO.	PART NUMBER	DESCRIPTION 1 2 3 4 5 6 7	UNITS PER ASSY	USABLE ON CODE
80-	26-5600-1	PANEL INSTL, Main instrument (for NHA see fig. 79)	REF	
	26-5600-400	. PANEL ASSY, Main instrument	1	
-1	B4750C	. . LIGHT, Panel, eyebrow, clear (72914)	2	
-2	B4752C	. . LIGHT, Panel, eyebrow, clear (72914)	1	
-3	B4796C	. . LIGHT, Panel, eyebrow, clear (72914)	1	
-4	B4755C	. . LIGHT, Panel, eyebrow, clear (72914)	11	
-5	B4855C	. . LIGHT, Panel, eyebrow, clear (72914)	10	
-6	B4755-1C	. . LIGHT, Panel, eyebrow, clear (72914)	6	
-7	B4766-1C	. . LIGHT, Panel, eyebrow, clear (72914)	1	
-8	B4766C	. . LIGHT, Panel, eyebrow, clear (72914)	1	
-9	B4850C	. . LIGHT, Panel, eyebrow, clear (72914)	3	
-10	B4888C	. . LIGHT, Panel, eyebrow, clear (72914)	2	
-11	MS25237-327	. . LAMP	76	
-12	3419-5AA1	. . ACCELEROMETER, Electrical, linear (19315) (05229 Spec 26-5002-1)	1	
-13	AN5790-6	. . INDICATOR, Temperature, outside air (05229 Spec 26-5004-1) (for details see T.O. 5E6-3-9-3)	1	
-14	AN5743T1A	. . CLOCK, Aircraft (05229 Spec 26-5003-1) (for details see T.O. 5N11-2-1-31) (alt AN5743T2)	1	
-15	ID351/ARN	. . INDICATOR, Course (VOR/1LS) (05229 Spec 26-5009-1) (for details see T.O. 12R5-2ARN204)	1	
-16	1214DX8-05(L7A)	. . INDICATOR, Airspeed (89944) (05229 Spec 26-5008-1) (for details see T.O. 5F8-2-3-1)	2	
-17	ID250/ARN	. . INDICATOR, Course (RMI) (05229 Spec 26-5010-1) (for details see T.O. AN16-351D250-3)	1	
-18	114756-01	. . GYROSCOPE, Attitude, type MM2 (07690) (05229 Spec 26-5012-1)	1	
-19	26-5600-47	. . BRACKET, Gyroscope (ATTACHING PARTS)	1	
	AN507B632R4	. . SCREW	2	
		----*----		
-20	ID307/ARN	. . INDICATOR, Tacan azimuth (05229 Spec 26-5017-1) (altered from 7000-1A1A1 (19315))	1	
-21	AN5825-7	. . INDICATOR, Rate of climb (05229 Spec 26-5016-1) (for details see T.O. 5F8-9-3-1)	2	
-22	D22061-04-004	. . ALTIMETER, 0-80, 000 feet (89944) (05229 Spec 26-5015-3)	1	
-23	AN5536T2A	. . INDICATOR, Temperature, thermocouple (05229 Spec 26-5024-1) (for details see T.O. 5E6-3-6-31)	1	
-24	21000-50-4A1	. . INDICATOR, Water injection pressure (19315) (05229 Spec 26-5023-1)	1	
-25	AN5770-2-12	. . INDICATOR, Manifold pressure (05229 Spec 26-5022-1) (for details see T.O. 5P2-2-3-1)	1	
-26	AN5773-2	. . GAGE UNIT, Engine (05229 Spec 26-5027-1) (for details see T.O. 5E4-3-1)	2	
-27	6300A49A14-4A	. . INDICATOR, Dual autosyn, BMEP (19315) (05229 Spec 26-5039-1)	1	
-28	AN5530-2-12	. . INDICATOR, Electric tachometer, aircraft (05229 Spec 26-5025-1) (for details see T.O. 5E5-3-1-33)	1	
-29	AN5795-6	. . INDICATOR, Carburetor air temperature (05229 Spec 26-5031-1) (for details see T.O. 5E6-3-9-3)	1	
-30	6300B4B14A1	. . INDICATOR, Fuel flow (19315) (05229 Spec 26-5029-1) (for details see T.O. 5P3-1-31) (alt 6007-38-7A (19315))	1	
-31	AN5820-1	. . INDICATOR, Turn and bank, type A11 (05229 Spec 26-5014-1) (for details see T.O. 5F8-4-2-1) (alt AN5820-4)	2	
-32	213-1	. . INDICATOR, Directional gyro, type AIM200 (13044)	1	
-33	256-20	. . INDICATOR, Horizontal reference, type AIM500 (13044)	1	
-34	671BK010 (C12)	. . ALTIMETER, 0-80,000 feet (89944) (05229 Spec 26-5015-1) (for details see T.O. 5F3-4-2-1)	1	
-35	1297C8-05	. . INDICATOR, True air speed (89944) (05229 Spec 26-5032-1) (for details see T.O. 5F8-2-10-3)	1	
-36	1116-30	. . INTERVALOMETER, Camera B9A (00048) (GFE) (for details see T.O. 10A5-6-6-1)	1	
-37	8DJ20ADD	. . INDICATOR, Fuel quantity, right wing (02295) (05229 Spec 26-5019-1) (for details see T.O. 5L6-4-2-13) (alt 8DJ20AAD (02295))	1	
-38	26-5600-20	. . PLATE, Cover	1	

FIG. AND INDEX NO.	PART NUMBER	DESCRIPTION 1 2 3 4 5 6 7	UNITS PER ASSY	USABLE ON CODE
80-39	8DJ20ADC	. . INDICATOR, Fuel quantity, main tanks (02295) (05229 Spec 26-5020-1) (for details see T.O. 5L6-4-2-11)	1	
-40	AN5771-5A	. . INDICATOR, Suction (05229 Spec 26-5028-1) (for details see T.O. 5P2-2-1-31)	1	
-41	8DJ20ADD	. . INDICATOR, Fuel quantity, left wing (02295) (05229 Spec 26-5018-1) (for details see T.O. 5L6-4-2-13) (alt 8DJ20AAD (02295))	1	
-42	A802CDSB	. . SWITCH, Lock, ignition (86547)	1	
-43	8DJ11PEA	. . INDICATOR, Wing flap position (02295) (05229 Spec 26-5021-1) (for details see T.O. 5P3-1-43)	1	
-44	26-5600-23	. . PLATE, Cover	1	
-45	ID310/ARN	. . INDICATOR, Tacan range (05229 Spec 26-5013-1)	1	
-46	AN5771-4	. . INDICATOR, Hydraulic pressure (05229 Spec 26-5028-1) (for details see T.O. 5P2-2-1-31)	1	
-47	AN3203V30	. . VOLTMETER, DC (05229 Spec 26-5006-1) (for details see T.O. 5M1-4-3-23)	1	
-48	MS25025-1	. . LOADMETER, DC, aircraft (05229 Spec 26-5007-1)	2	
-49	AN3202-1	. . VOLTMETER, AC (05229 Spec 26-5005-1) (for details see T.O. 5M1-4-2-3)	1	
-50	26-5600-33	. . PLATE, Identification, ADF	1	
-51	26-5600-32	. . PLATE, Identification, VOR	1	
		(ATTACHING PARTS FOR ITEMS 1 THRU 51)		
-52	NAS487-15	. . NUT	120	
-53	NAS487-17	. . NUT	7	
-54	NAS487-18	. . NUT	3	
-55	NAS487-20	. . NUT	25	
-56	AN507B632R20	. . SCREW	14	
-57	AN507B632R16	. . SCREW	27	
-58	AN507B632R12	. . SCREW	4	
-59	AN515B6R20	. . SCREW	14	
-60	AN515B6R16	. . SCREW	72	
-61	AN515B6R12	. . SCREW	18	
-62	AN515B6R8	. . SCREW	6	
		----*----		
-63	NAS42DD4-22	. . SPACER	4	
-64	NAS42DD6-8	. . SPACER	3	
-65	MS25041-2	. . LIGHT, Indicator, red	6	
-66	MS25041-4	. . LIGHT, Indicator, amber	4	
-67	MS25041-10	. . LIGHT, Indicator, blue	2	
-68	MS25041-3	. . LIGHT, Indicator, green	5	
-69	MS25237-327	. . LAMP, Incandescent (3 used as spares)	20	
-70	26-5600-25	. . PANEL, Engraved, landing gear warning	1	
-71	26-5600-29	. . PANEL, Engraved, generator overheat	1	
-72	A2953	. . LAMPHOLDER, Spare lamps (72914)	1	
-73	A5299C24	. . LIGHT, Panel (72914)	6	
-74	334	. . LAMP, Incandescent (72914) (2 used as spares)	8	
-75	ITL1-1A	. . SWITCH, Sensitive (91929)	2	
-76	5008-2	. . SWITCH, Push-pull (81896)	2	
-77	229	. . BUSS BAR (81896)	2	
-78	E801-3M3	. . HANDLE, Pull, firewall shut-off (Avionics Instrument and Repair Corp., Burbank, Calif.)	2	
		(ATTACHING PARTS)		
	NAS220R9	. . SCREW	4	
		----*----		
-79	FYLD317	. . RHEOSTAT, Heater temp control (05624)	1	
-80	26-5600-26	. . PANEL, Engraved, feather button	1	
-81	26-5600-27	. . PANEL, Engraved, prop rev	1	
-82	26-5600-28	. . PANEL, Engraved	1	
-83	C1514/ARN-6	. . CONTROL HEAD, ADF (GFE) (for details see T.O. 12R5-2ARN6-2)	1	
	26-4613-400	. . PANEL ASSY, Selector, navigation system	1	
-84	PFSC3-1/2-38	. . . FASTENER, Turnlock (71286)	4	
-85	MS25041-1	. . . LIGHT, Indicator, clear	2	
-86	MS25237-327	. . . LAMP, Incandescent	2	
-87	AN340C6	. . . NUT	1	

FIG. AND INDEX NO.	PART NUMBER	DESCRIPTION 1 2 3 4 5 6 7	UNITS PER ASSY	USABLE ON CODE
80-88	AN935-6	. . . WASHER	1	
-89	AN960C6L	. . . WASHER	1	
-90	AN500AD6-10	. . . SCREW	1	
-91	AN6227B1	. . . PACKING	3	
-92	K7001-06-04	. . . NUT, Drive (72962)	2	
-93	AN500AD6-6	. . . SCREW	2	
-94	26-4613-1	. . . PANEL, Engraved	1	
-95	59.3001	. . . METER, Direction finder (16688)	1	
		(ATTACHING PARTS)		
	AN340C4	. . . NUT	3	
	AN935-4	. . . WASHER	3	
	AN960C4L	. . . WASHER	3	
-96	AN508-4-10	. . . SCREW	3	
		----*----		
-97	MS3102A20-33P	. . . CONNECTOR	1	
-98	26-4613-5	. . . SPACER, Threaded	4	
		(ATTACHING PARTS FOR ITEMS 97 AND 98)		
-99	AN515-4R6	. . . SCREW	8	
	AN935-4	. . . WASHER	8	
		----*----		
-100	MS25059-3	. . . SWITCH, Toggle	1	
-101	855S1-9U	. . . LIGHT, Indicator (08717)	2	
-102	MS25237-327	. . . LAMP	2	
-103	855025	. . . WASHER, Insulating (08717)	2	
-104	855049	. . . LUG, Terminal (08717)	2	
-105	26-4613-3	. . . PANEL, Mounting	1	
-106	C1763/ARN-21	. . CONTROL HEAD, Tacan (GFE) (for details see	1	
		T.O. 12R5-2ARN-21-4)		
-107	C760B/ARN-14	. . CONTROL HEAD, VOR (GFE) (for details see	1	
		T.O. 12R5-2ARN-14-14)		
-108	26-5600-16	. . PANEL, Blank	1	
-109	PFSC3-1/2-38	. . FASTENER, Turnlock (71286)	2	
-110	G51H-B	. . STRIP, Grommet (03296)	AR	
-111	G51H-C	. . STRIP, Grommet (03296)	AR	
	26-3601-1	. . PANEL ASSY, Camera, forward oblique	1	
-112	CA2182-6	. . . CONNECTOR (71468)	1	
		(ATTACHING PARTS)		
	MS20365-440	. . . NUT	4	
	AN960-4L	. . . WASHER	4	
	AN515-4R6	. . . SCREW	4	
		----*----		
-113	26-1028-13	. . . DECAL, Identification	1	
-114	PFSC3-1/2-38	. . . FASTENER, Turnlock (71286)	4	
-115	26-3601-3	. . . PANEL, Mounting	1	
-116	C824A/AIC-10	. . CONTROL BOX, Interphone (GFE)	1	
		(for details see T.O. 12R2-2A1C10-4)		
-117	D101-421	. . STUD, Saber (78553)	2	
-118	A1663-017-1	. . CLIP, Spring, saber (78553)	2	
		(ATTACHING PARTS)		
	AN5096R5	. . SCREW	2	
	AN935-6	. . WASHER	2	
		----*----		
-119	4437	. . CLIP, Fuse (71400)	1	
		(ATTACHING PARTS)		
	MS20365-832	. . NUT	1	
	AN960-8	. . WASHER	1	
	NAS220-8	. . SCREW	1	
		----*----		
-120	26-5600-14	. . STRIP, Fastener (make from PR3-1/2-1X4 (72794))	2	
-121	26-5600-18	. . STRIP, Fastener (make from PR3-1/2-1X3 (72794))	2	
-122	26-5600-15	. . STRIP, Fastener (make from PR3-1/2-1X16 (72794))	2	
-123	26-5600-30	. . PLATE, Identification, spare bulb	1	
-124	26-5600-31	. . PLATE, Identification, inverter fail	1	
		(ATTACHING PARTS FOR ITEMS 123 AND 124)		
	MS24622-5	. . SCREW	4	
		----*----		

FIG. AND INDEX NO.	PART NUMBER	DESCRIPTION 1 2 3 4 5 6 7	UNITS PER ASSY	USABLE ON CODE
80-	26-5631-1	. . LATCH ASSY	1	
		(ATTACHING PARTS)		
	MS20365-1032	. . NUT	2	
	AN960-10	. . WASHER	2	
	NAS221-10	. . SCREW	2	
		----*----		
-125	22K1-02	. . . NUT, Plain, cap (72962)	1	
-126	26-5632-1	. . . HANDLE	1	
-127	AN960-10	. . . WASHER	1	
-128	26-5633-1	. . . PIN, Latch	1	
-129	2207992	. . . SPRING, Helical, compression (18355)	1	
-130	2207980	. . . BASE, Latch (18355)	1	
-131	26-5600-22	. . HINGE, Continuous (make from MS20257P2)	1	
-132	26-5600-3	. . PANEL, Side	1	
-133	150PL124	. . MOUNT, Resilient (76005)	5	
		(ATTACHING PARTS)		
	MS20365-832	. . NUT	20	
	AN960-8L	. . WASHER	40	
	NAS220-9	. . SCREW	20	
		----*----		
-134	2607-500	. . STUD INSTL, Ground	1	
-135	MS25083-2B	. . JUMPER ASSY	1	
-136		. . VALVE, Needle (see fig. 79)	REF	
-137		. . VALVE, Purge (see fig. 79)	REF	
-138	26-5600-2	. . PANEL, Main	1	
-139	GRC-1/4-28	. NUT, Plain, cap (18702)	2	
-140	MS20365-1032	. NUT	2	
-141	AN960-10	. WASHER	4	
-142	AN3-11A	. BOLT	2	
-143	AN43B4	. EYEBOLT	2	
-144	AN486-4	. CLEVIS, Rod end	2	
-145	MS20365-428	. NUT	6	
-146	J2049-2D	. WASHER (76005)	4	
-147	26-5600-13	. ROD, Support	1	
-148	26-5600-21	. ROD, Support	1	
-149	150PL18	. MOUNT, Resilient (76005)	2	
		(ATTACHING PARTS)		
	MS20365-832	. NUT	8	
	AN960-6L	. WASHER	16	
	NAS220-9	. SCREW	8	
		----*----		
-150	26-5600-6L	. BRACKET, LH	1	
-151	26-5600-6R	. BRACKET, RH	1	
		(ATTACHING PARTS)		
	MS20365-1032	. NUT	14	
	AN960-10	. WASHER	28	
	AN526-1032R10	. SCREW	14	
		----*----		
-152	26-5600-7	. BRACKET ASSY (Welded)	1	
-153	26-5600-8	. BRACKET ASSY (Welded)	1	
		(ATTACHING PARTS FOR ITEMS 152 AND 153)		
	MS20365-1032	. NUT	7	
	AN960-10	. WASHER	14	
	AN3-7A	. BOLT (Used on -7 only)	4	
	AN3-5A	. BOLT (Used on -8 only)	3	
		----*----		
-154	150PL124	. . MOUNT, Resilient (76005)	1	
		(ATTACHING PARTS)		
	MS20365-832	. . NUT	4	
	AN960-8L	. . WASHER	8	
	NAS220-9	. . SCREW	4	
		----*----		
-155	MS20365-428	. . NUT	1	
-156	26-5634-1	. . BLOCK ASSY, Strike (welded) (used on -8 only)	1	

FIG. AND INDEX NO.	PART NUMBER	DESCRIPTION 1 2 3 4 5 6 7	UNITS PER ASSY	USABLE ON CODE
80-157	150PL124	. MOUNT, Resilient (76005)	4	
		(ATTACHING PARTS)		
	MS20365-832	. NUT	16	
	AN960-8L	. WASHER	32	
	NAS220-9	. SCREW	16	
		----*----		
-158	MS20365D428A	. NUT	5	
-159	J2049-2D	. WASHER (76005)	10	
-160	AN4DD22A	. BOLT	5	

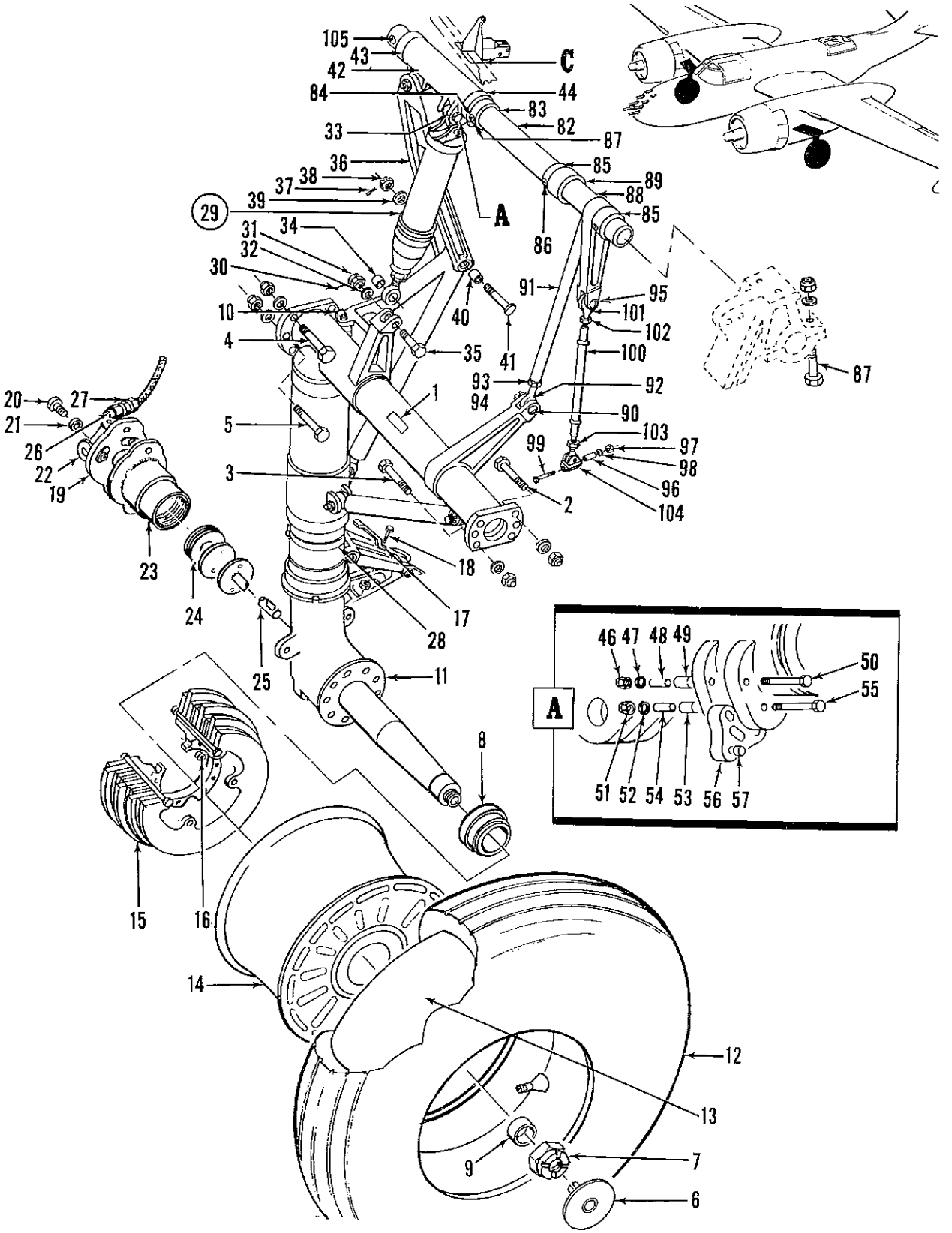

Figure 81. Main Landing Gear Installation (Sheet 1 of 2)

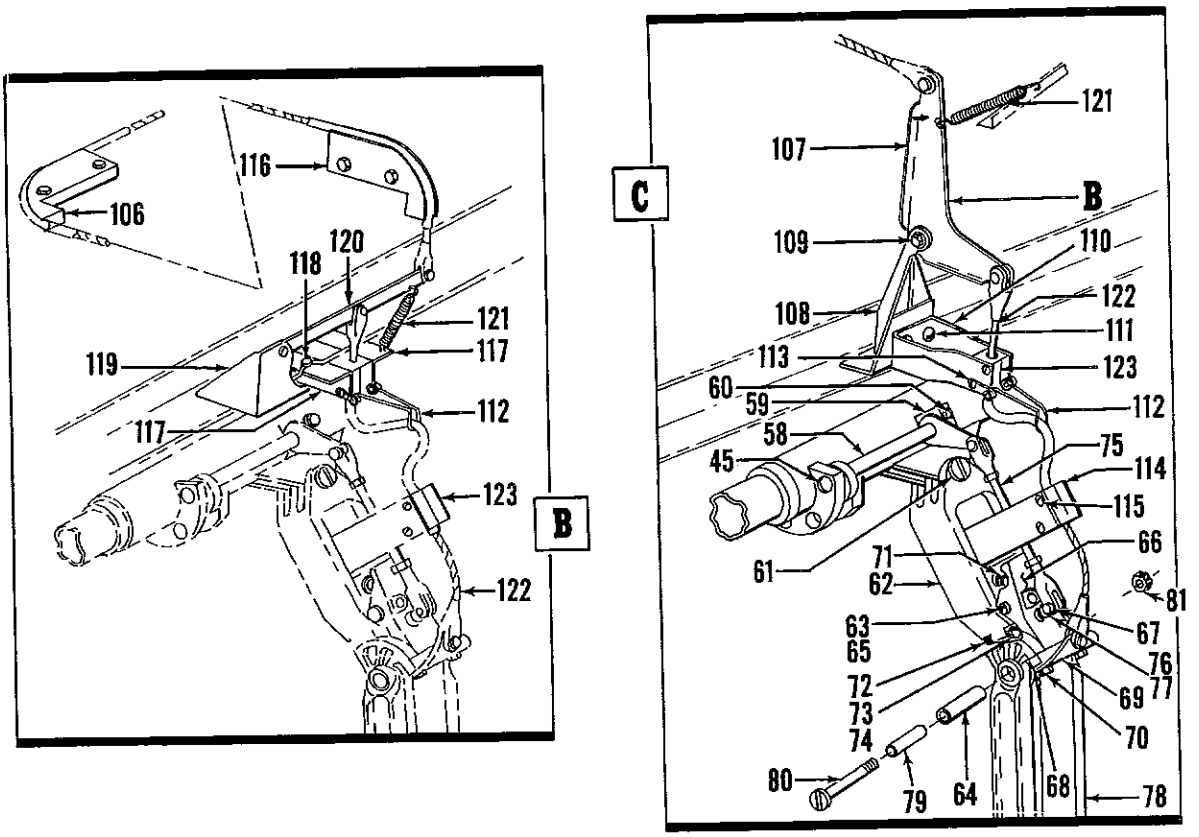

Figure 81. Main Landing Gear Installation (Sheet 2 of 2)

FIG. AND INDEX NO.	PART NUMBER	DESCRIPTION 1 2 3 4 5 6 7	UNITS PER ASSY	USABLE ON CODE
81-	26-7050-1	LANDING GEAR INSTL, Main (altered from 5122370 (18355)) (for NHA see fig.2)	REF	
-1	S1152323	. PLATE, Name (18355)	2	
	26-7121-1	. GEAR ASSY, Main landing, LH (altered from 5122370 (18355))	1	
	26-7121-2	. GEAR ASSY, Main landing, RH (altered from 5122370 (18355))	1	
		(ATTACHING PARTS)		
	MS20365-720	. NUT	6	
	AN960-716	. WASHER	6	
-2	AN7-25A	. BOLT	4	
-3	AN7-27A	. BOLT	2	
	MS20365-820	. NUT	6	
	AN960-816	. WASHER	AR	
-4	AN8-32A	. BOLT	4	
-5	MS20008-44	. BOLT	2	
		----*----		
-6	26-7118	. . BRACKET ASSY, B26 wheel and brake (riveted)	1	
	26-7002-1	. . STRUT ASSY, Shock absorber, LH (altered from 5122374)	1	
	26-7002-2	. . STRUT ASSY, Shock absorber, RH (altered from 5122374)	1	
-7	8211A92	. . . NUT, Wheel (07111)	1	
-8	2600004	. . . COLLAR (06848)	1	
-9	2600005	. . . COLLAR (06848)	1	
-10	1151086	. . . CLIP, LH (18355)	1	
	1151086-1	. . . CLIP, RH (18355)	1	
-11	8211DL	. . . STRUT, Shock, LH (06848)	1	
	8211DR	. . . STRUT, Shock, RH (06848)	1	
-12	NO NUMBER	. . TIRE, Pneumatic, type III, 15.50-20, 14 ply (per Spec MIL-T-5041) (GFE)	1	
-13	NO NUMBER	. . INNER TUBE, Type III, 15.50-20 (per Spec MIL-T-5041) (GFE)	1	

FIG. AND INDEX NO.	PART NUMBER	DESCRIPTION 1 2 3 4 5 6 7	UNITS PER ASSY	USABLE ON CODE
81 -14	150280-3R	. . WHEEL AND BEARING ASSY (06848) (For details see T.O. 4WT-7-520)	1	
-15	2600000-1 *1	. . BRAKE ASSY (06848) (For details see T.O. 4B1-4-243)	1	
		(ATTACHING PARTS)		
	MS24665-4-18	. . PIN	10	
	AN310-8	. . NUT	10	
	AN960-816	. . WASHER	20	
	2278805	. . ADAPTER, Brake mounting bolt (18355)	10	
	AN8-17	. . BOLT	10	
		----*----		
-16	51103	. . PLUG, Button (61864)	2	
-17	26-7102	. . CAM, Retract release switch	1	
		(ATTACHING PARTS)		
	MS20365-1032	. . NUT	2	
-18	AN3-7A	. . BOLT	2	
		----*----		
	26-7107-1	. . PLATE INSTL, Shuttle valve mounting, LH	1	
	26-7107-2	. . PLATE INSTL, Shuttle valve mounting, RH	1	
-19	26-7107-3	. . . PLATE, Shuttle valve mounting, LH	1	
	26-7107-4	. . . PLATE, Shuttle valve mounting, RH	1	
		(ATTACHING PARTS)		
	MS20365-428	. . . NUT	1	
	AN960-416	. . . WASHER	6	
	AN4-17A	. . . BOLT	1	
	26-7106-1	. . . BOLT, Shuttle valve mounting plate (welded)	1	
		----*----		
-20	AN4-16A	. . . BOLT	3	
-21	AN960-416	. . . WASHER	3	
-22	4127548	. . VALVE, Shuttle (18355)	1	
-23	26-7108-1	. . ADAPTER ASSY, Wheel skid detector, LH	1	
	26-7108-2	. . ADAPTER ASSY, Wheel skid detector, RH	1	
-24	5823E1	. . DETECTOR, LH (81982) (for details see T.O. 4BA2-5-4)	1	
	5823E2	. . DETECTOR, RH (81982) (for details see T.O. 4BA2-5-4)	1	
		(ATTACHING PARTS)		
	MS20365-428	. . NUT	2	
	AN4-4A	. . BOLT	2	
		----*----		
-25	26-7104-1	. . SHAFT ASSY, Torque (welded)	1	
-26	AN792-6	. . FITTING	2	
-27	143S2-6D	. . COUPLING (70128)	2	
-28	26-7103	. . SUPPORT ASSY, Landing gear retracting and release switch (18355)	1	
		(ATTACHING PARTS)		
	MS20365-1032	. . NUT	2	
	AN3-15A	. . BOLT	2	
		----*----		
-29	5122377	. CYLINDER ASSY, Main landing gear actuating (18355) (for details see fig. 82)	2	
		(ATTACHING PARTS)		
-30	MS24665-3-3	. PIN	4	
-31	AN310-7	. NUT	4	
-32	AN960-716	. WASHER	4	
-33	S177213-4375-5605-906	. BUSHING, Needle bearing hardened (18355)	2	
-34	S177213-4375-5605-873	. BUSHING, Needle bearing hardened (18355)	2	
-35	46A474	. BOLT (18355)	4	
		----*----		
-36	5122378	. LINK ASSY, Main landing gear retracting, LH (18355)	1	
	5122378-1	. LINK ASSY, Main landing gear retracting, RH (18355)	1	
		(ATTACHING PARTS)		
-37	MS24665-4-8	. PIN	2	
-38	AN320-16	. NUT	2	
-39	AN960-1616	. WASHER	2	
-40	2276057	. SPACER, Lower link (18355)	2	
-41	S2035884-1614-422	. BOLT, Shear or bearing 160,000 pound (18355)	2	
		----*----		

FIG. AND INDEX NO.	PART NUMBER	DESCRIPTION 1 2 3 4 5 6 7	UNITS PER ASSY	USABLE ON CODE
81-	5150052	. . SUPPORT ASSY, Upper retracting link, LH (18355)	1	
	5150052-1	. . SUPPORT ASSY, Upper retracting link, RH (18355)	1	
-42	5150052-2	. . . SUPPORT, Upper retracting link, LH (18355)	1	
	5150052-3	. . . SUPPORT, Upper retracting link, RH (18355)	1	
-43	1127776	. . . BEARING, Upper retracting link, in board (18355)	1	
-44	1127777	. . . BEARING, Upper retracting link, outboard (18355)	1	
-45	1206386	. . . BEARING, Latch release shaft, outboard (18355)	1	
	4208082	. . LUG ASSY, Latch release (18355)	1	
		(ATTACHING PARTS)		
-46	AN310-6	. . NUT	2	
-47	AN960-616	. . WASHER	2	
-48	187048-6S58	. . SPACER, Milled slot type (18355)	2	
-49	2208064	. . ROLLER, Latch release (18355)	2	
-50	46A473	. . BOLT (18355)	2	
-51	AN310-4	. . NUT	1	
-52	AN960-416	. . WASHER	1	
-53	1074744-4S906	. . SPACER (18355)	1	
-54	1150563	. . BUSHING, Flexible, latch control (18355)	1	
-55	AN4-22	. . BOLT	1	
		----*----		
-56	4208082-2	. . . LUG, Latch release	1	
-57	116500-92028G	. . . BUSHING (18355)		
-58	4128179	. . SHAFT ASSY, Latch release, LH (18355)	1	
	4128179-1	. . SHAFT ASSY, Latch release, RH (18355)	1	
-59	1150578	. . BEARING ASSY, Latch release shaft (18355)	1	
		(ATTACHING PARTS)		
-60	AN502-10-22	. . SCREW	2	
		----*----		
	1381	. . . BEARING, Durex (76462)	2	
	5128378	. . LINK ASSY, Retracting upper (18355)	1	
		(ATTACHING PARTS)		
	AN320-16	. . NUT	1	
	1026614G16-301	. . SPACER, OD bearing (18355)	1	
-61	2035884-1614-318B	. . BOLT, Shear or bearing 160, 000 pound (18355)	1	
		----*----		
-62	5128378-2	. . . LINK, Retracting upper (18355)	1	
-63	XB364-1468	. . . BEARING (04445)	1	
-64	116500-20A204G	. . . BUSHING, Bronzed, grooved (18355)	1	
	530GB482	. . LATCH ASSY, (18355)	1	
		(ATTACHING PARTS)		
	AN320-6	. . NUT	1	
	AN960-616	. . WASHER	1	
	1026614GG-116	. . SPACER, OD bearing (18355)	1	
-65	AN26-46	. . BOLT	1	
		----*----		
-66	530GB482-2	. . . LATCH, Main landing gear (18355)	1	
-67	131736-04C008	. . . BUSHING (18355)	1	
-68	1150582-2	. . SHIM, Main landing gear latch cap (18355)	AR	
	1150582-4	. . SHIM, Main landing gear latch cap (18355)	AR	
	1150582-6	. . SHIM, Main landing gear latch cap (18355)	AR	
-69	1150564	. . CAP, Latch (18355)	1	
		(ATTACHING PARTS)		
-70	1150583	. . BOLT, Latch cap (18355)	2	
		----*----		
-71	1150579	. . SPRING, Retracting link (18355)	2	
-72	110242-6-15HP	. . BOLT, Special, full thread (18355)	2	
-73	AN960-616	. . WASHER	2	
-74	AN315-6R	. . NUT	2	
-75	530GA484	. . ROD ASSY, Short clevis end (18355)	1	
-76	MS20394-17	. . PIN	2	
	AN960-416L	. . WASHER	2	
-77	530GC3139	. . BOLT, Clevis rod (18355)	1	
	MS20365-624	. . NUT	1	
-78	5128376	. . LINK. Lower retracting, LH (18355)	1	

FIG. AND INDEX NO.	PART NUMBER	DESCRIPTION 1 2 3 4 5 6 7	UNITS PER ASSY	USABLE ON CODE
81-	5128376-1	. . LINK, Lower retracting, RH (18355)	1	
-79	2035884-1614-420	. . BOLT, Shear or bearing 160,000 pound (18355)	1	
-80	2276057	. . SPACER, Lower link (18355)	1	
-81	AN320-16	. . NUT	1	
-82	3126972	. SHAFT, Retracting link (18355)	2	
-83	1151350	. COLLAR, Shaft inboard (18355)	2	
		(ATTACHING PARTS)		
	MS20365-428	. NUT	2	
	AN960-416	. WASHER	2	
-84	AN24-44A	. BOLT	2	
		----*----		
-85	1151351	. COLLAR, Main landing gear shaft outboard (18355)	4	
		(ATTACHING PARTS)		
	MS20365-428	. NUT	4	
	AN960-416	. WASHER	4	
-86	AN24-48A	. BOLT	4	
		----*----		
	4151202	. ARM ASSY, Nacelle door actuating bellcrank, LH (18355)	1	
	4151202-1	. ARM ASSY, Nacelle door actuating bellcrank, RH (18355)	1	
		(ATTACHING PARTS)		
	MS20365-524	. NUT	8	
	AN960-516	. WASHER	8	
-87	AN5-10A	. BOLT	8	
		----*----		
-88	4151202-2	. . ARM ASSY, Nacelle door actuating bellcrank, LH (18355)	1	
	4151202-3	. . ARM ASSY, Nacelle door actuating bellcrank, RH (18355)	1	
-89	2151618	. . BEARING, Bellcrank actuating (18355)	2	
	2151648	. ROD ASSY, Bellcrank actuating (18355)	2	
		(ATTACHING PARTS)		
	MS24665-3-3	. PIN	4	
	AN320-8	. NUT	4	
	AN960-816	. WASHER	4	
-90	AN28-24	. BOLT	4	
		----*----		
-91	2151650	. . TUBE ASSY, Metal, bellcrank actuating rod (18355)	1	
-92	1151344-6	. . END ASSY, Bellcrank actuating rod (18355)	1	
	1151344-8	. . END ASSY, Bellcrank actuating rod (18355)	1	
	RBC8	. . . BEARING, Needle (51588)	1	
-93	AN316-9L	. . NUT	1	
-94	AN316-9R	. . NUT	1	
	2151647	. ROD ASSY, Nacelle outboard door actuating (18355)	2	
		(ATTACHING PARTS)		
	MS24665-2-3	. PIN	2	
	AN320-5	. NUT	2	
	AN960-516	. WASHER	2	
-95	AN25-31	. BOLT	2	
-96	1205809	. BUSHING, Nacelle outboard door actuating rod block (18355)	2	
	MS24665-2-2	. PIN	2	
-97	AN320-5	. NUT	2	
-98	AN960-516L	. WASHER	2	
-99	NAS5522	. BOLT	2	
		----*----		
-100	2151649	. . TUBE ASSY, Nacelle outboard door actuating rod (18355)	1	
-101	1151342	. . END ASSY, Nacelle outboard door actuating rod (18355)	1	
	AES	. . . BEARING, Needle (77896)	1	
-102	AN316-6L	. . NUT	1	
-103	AN316-6R	. . NUT	1	
-104	2151647-4	. . END ASSY, Nacelle outboard door actuating rod (18355)	1	
	MS20365-428	. NUT	2	
	AN960-416	. WASHER	4	
-105	MS20008-42	. BOLT	2	
-106	530GB489	. BLOCK, Guide (18355)	2	
-107	530GC479	. BELLCRANK (18355)	2	
-108	530GC480	. BRACKET(18355)	2	
		(ATTACHING PARTS)		
	AN320-4	. NUT	2	

FIG. AND INDEX NO.	PART NUMBER	DESCRIPTION 1 2 3 4 5 6 7	UNITS PER ASSY	USABLE ON CODE
81-	AN960-416L	. WASHER	2	
-109	AN4-4	. BOLT, Machine	2	
		----*----		
-110	530GC481-1	. BRACKET (18355)	2	
		(ATTACHING PARTS)		
	MS20365-1032	. NUT	2	
	AN960-10L	. WASHER	2	
-111	AN520-10-20	. SCREW	2	
		----*----		
-112	540GB182	. . SPRING	1	
		(ATTACHING PARTS)		
-113	AN520-10-20	. . SCREW, Machine	1	
		----*----		
-114	530GC481-2	. BRACKET (18355)	2	
		(ATTACHING PARTS)		
	MS20365-1032	. NUT	4	
	AN960-10L	. WASHER	4	
-115	AN3-6A	. BOLT	4	
		----*----		
-116	530GB510	. BLOCK, Guide (18355)	2	
-117	530GB508	. BRACKET, LH (18355)	1	
	530GB507	. BRACKET, RH (18355)	1	
		(ATTACHING PARTS)		
	MS20365-1032	. NUT	3	
	AN960-10L	. WASHER	3	
	1125962	. SPACER (18355)	3	
-118	AN3-10A	. BOLT	3	
		----*----		
-119	530GB506	. BRACKET, Pivot (18355)	2	
-120	530GA509	. LEVER, Latch release (18355)	2	
-121	1193936	. SPRING (18355)	2	
-122	530GA487	. CABLE, Bellcrank to latch (18355)	2	
-123	530GA486-1	. BLOCK, Clamping upper (18355)	2	
	530GA486-2	. BLOCK, Clamping lower (18355)	2	
	*1	FOR FIELD LEVEL REPAIR USE BRAKE KIT P/N 2600027 (06848). FOR DEPOT LEVEL OVERHAUL AND REPAIR USE BRAKE KIT P/N 2600017 (06848).		

FIG. AND INDEX NO.	PART NUMBER	DESCRIPTION 1 2 3 4 5 6 7	UNITS PER ASSY	USABLE ON CODE
82-	5122377	CYLINDER ASSY, Main landing gear actuating (18355) (for NHA see fig. 37)	REF	
-1	5128434	. BARREL ASSY, Main landing gear actuating cylinder (18355)	1	
-2	AN920-8D	. UNION	1	
-3	MS28778-8	. PACKING	1	
-4	5128439	. PISTON ASSY, Main landing gear actuating cylinder (18355)	1	
-5	AN6227-38	. PACKING	1	
-6	2150742	. NUT, Main landing gear actuating cylinder external packing (18355)	1	
-7	1111908-316-322-188	. GASKET, External seal ring neoprene (18355)	1	
-8	4128202	. END, Main landing gear actuating cylinder (18355)	1	
-9	AN6229-22	. PACKING	1	
-10	AN6225-22	. PACKING	4	
-11	1073530B104-008	. RING, Bronze long packing (18355)	1	
-12	2126829	. NUT, Main landing gear actuating cylinder packing (18355)	1	

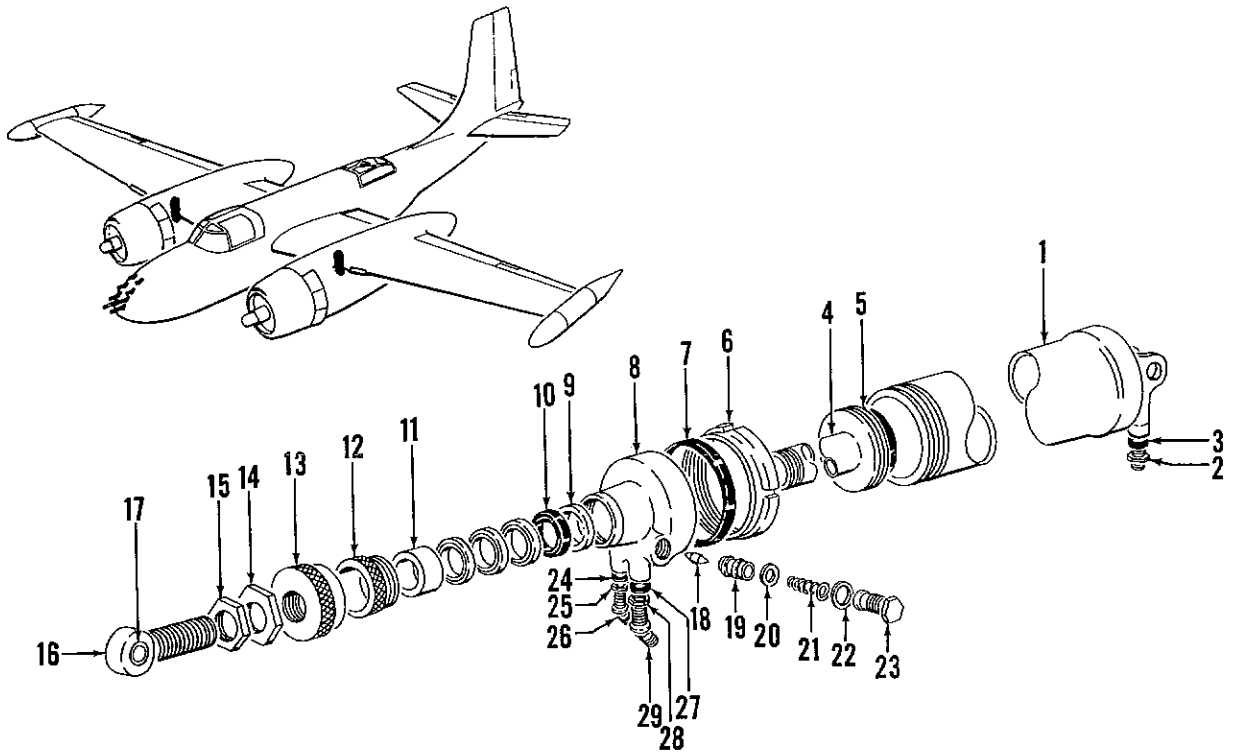

Figure 82. Main Landing Gear Actuating Cylinder Assembly

FIG. AND INDEX NO.	PART NUMBER	DESCRIPTION 1 2 3 4 5 6 7	UNITS PER ASSY	USABLE ON CODE
82-13	2126823	. STOP, Main landing gear actuating cylinder rod (18355)	1	
-14	1127790	. NUT, Main landing gear actuating cylinder rod stop lock (18355)	1	
-15	AN316-12R	. NUT	1	
	2126808	. END ASSY, Main landing gear actuating cylinder rod (18355)	1	
-16	2126808-2	. . ROD END, Main landing gear actuating cylinder rod (18355)	1	
-17	116500-9A028G	. . BUSHING, Aluminum bronze grooved (18355)	1	
-18	1127653	. CONE, Shuttle valve 1/2-in. (18355)	1	
-19	1127705	. SPACER, Shuttle valve packing 1/2-in. (18355)	1	
-20	H107675-016	. SEAT (73324) (Emergency sub part may be made from AN6226-9)	2	
-21	1127663	. SPRING, Shuttle valve 1/2-in. (18355)	1	
-22	143908-028TC104-064	. WASHER (18355)	1	
-23	2126847	. PLUG, Shuttle valve 1/2-in. (18355)	1	
-24	MS28778-4	. PACKING	1	
-25	AN924-4D	. NUT	1	
-26	AN837-4D	. ELBOW	1	
-27	MS28778-8	. PACKING	1	
-28	AN924-8D	. NUT	1	
-29	AN837-8D	. ELBOW	1	

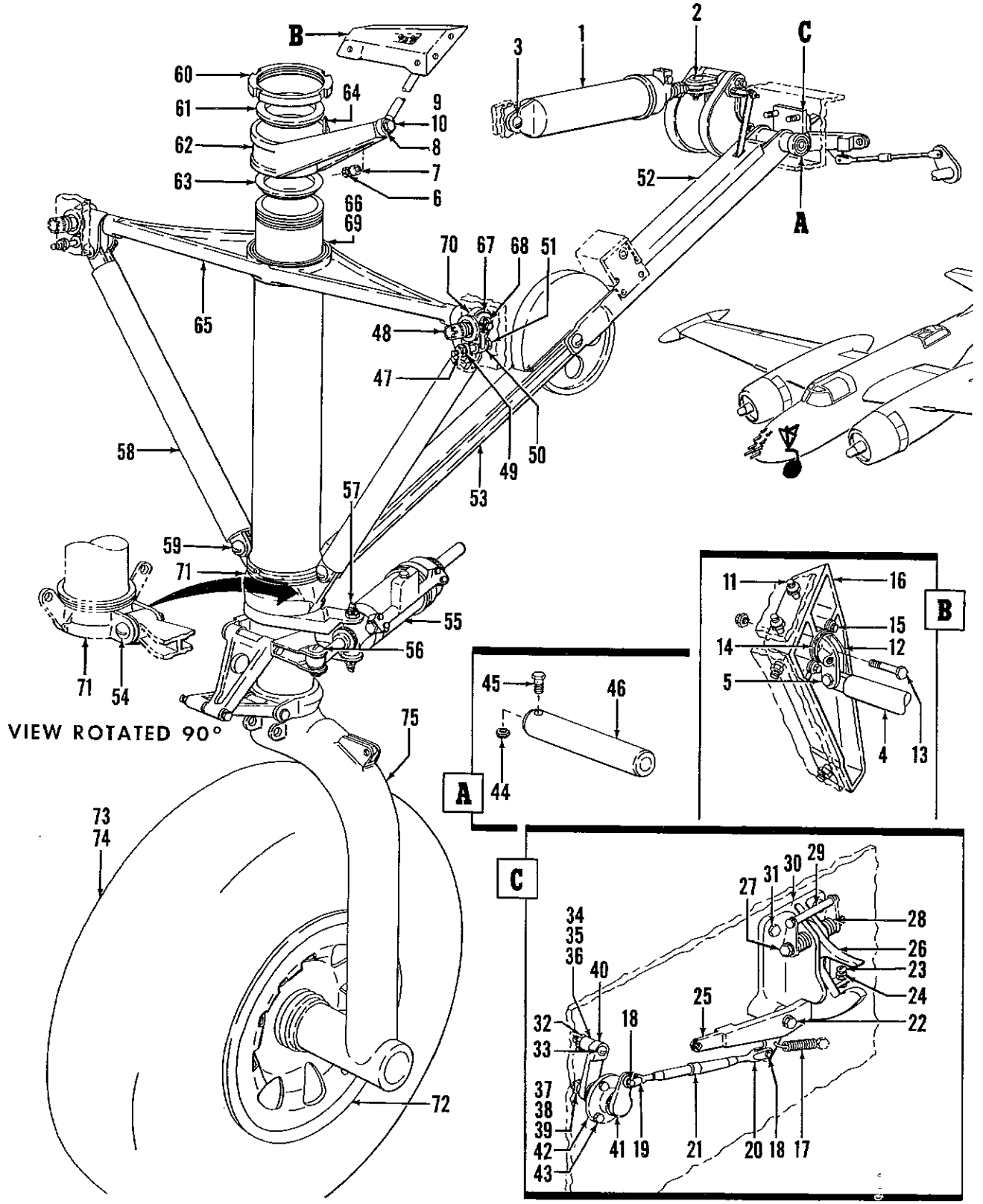

Figure 83. Nose Wheel Gear Installation

FIG. AND INDEX NO.	PART NUMBER	DESCRIPTION 1 2 3 4 5 6 7	UNITS PER ASSY	USABLE ON CODE
83 -	26-7051-1	GEAR INSTL, Nose wheel (for NHA see fig. 2)	REF	
-1	5122386	. CYLINDER ASSY, Nose wheel actuating (18355) (for detail see fig. 84)	1	
		(ATTACHING PARTS)		
	AN320-6	. NUT	1	
	AN960-616	. WASHER	1	
-2	AN26-23	. BOLT	1	
	AN320-7	. NUT	1	
	AN960-716	. WASHER	1	
	177213-4375-5605-748	. SPACER (18355)	1	
-3	AN27-26	. BOLT	1	
		----*----		
-4	2129260	. LINK ASSY, Nose wheel rotating mechanism (18355)	1	
		(ATTACHING PARTS)		
	AN310-3	. NUT	1	
	AN960-10L	. WASHER	2	
	177213-187-374-895	. BUSHING, Needle bearing hardened (18355)	1	
-5	AN3-12	. BOLT	1	
-6	AN310-4	. NUT	1	
-7	1151377	. SPACER, Nose wheel rotating mech. arm bolt (18355)	1	
-8	143908-008S024-125	. WASHER (18355)	1	
-9	AN4-21	. BOLT	1	
		----*----		
-10	AE82	. BEARING, Roller (77896)	1	
	4128231	. SUPPORT ASSY, Nose wheel rotating mech. swv. (18355)	1	
		(ATTACHING PARTS)		
	MS20365-428	. NUT	4	
	AN960-416	. WASHER	4	
-11	AN4-6A	. BOLT	4	
		----*----		
-12	2126892	. . SWIVEL, Rotating mechanism (18355)	1	
		(ATTACHING PARTS)		
	AN310-4	. . NUT	1	
-13	AN4-15	. . BOLT	1	
		----*----		
-14	2126893	. . BEARING, Rotating mech. swivel (18355)	1	
		(ATTACHING PARTS)		
-15	MS20073A5	. . BOLT	2	
		----*----		
-16	2139926	. . FITTING, Nose wheel rotating mech. (18355)	1	
-17	2205753	. SPRING, Nose wheel up latch (18355)	1	
-18	MS20392-11	. PIN	2	
-19	MS21252-16LS	. FORK, Turnbuckle	1	
-20	MS21252-16RS	. FORK, Turnbuckle	1	
-21	MS21251-16L	. BARREL, Turnbuckle	1	
	2205750	. ARM ASSY, Nose wheel hook up latch (18355)	1	
		(ATTACHING PARTS)		
	AN320-4	. NUT	1	
	1026614G4-011	. SPACER (18355)	1	
	AN960C416	. WASHER	1	
-22	AN4-16	. BOLT	1	
		----*----		
-23	110242-3-7HP	. . BOLT, Special flathead full threaded stl. (18355)	1	
-24	MS35690-10	. . NUT	2	
-25	2205750-2	. . ARM, Nose wheel up latch hook release (18355)	1	
-26	2208235	. HOOK, Nose wheel up latch (18355)	1	
		(ATTACHING PARTS)		
	AN310-4	. NUT	1	
	1026614G4-016	. SPACER, OD bearing (18355)	1	
	1026614G4-015	. SPACER, OD bearing (18355)	1	
	AN960-4	. WASHER	2	
-27	AN4-23	. BOLT	1	
		----*----		
-28	1128970	. SPRING, Nose wheel hook up latch (18355)	1	
-29	MS20392-57	. PIN	1	

FIG. AND INDEX NO.	PART NUMBER	DESCRIPTION 1 2 3 4 5 6 7	UNITS PER ASSY	USABLE ON CODE
83-30	2129302	. SUPPORT, Nose wheel up latch (18355)	1	
		(ATTACHING PARTS)		
-31	AN4-7A	. BOLT	3	
		----*----		
-32	AN320-6	. NUT	1	
-33	AN26-31	. BOLT	1	
-34	1026614-6-020	. SPACER, OD bearing (18355)	1	
-35	2033901-12SP500-018	. SPACER, Chromium molybdenum stl. (18355)	1	
-36	1205763	. KEY, Nose wheel crank arm up latch (18355)	1	
-37	AN320-9	. NUT	1	
-38	AN960-916	. WASHER	2	
-39	AN960-1016	. WASHER	2	
-40	2205751	. ARM, Nose wheel crank up latch (18355)	1	
-41	2205754	. CRANK, Nose wheel release up latch (18355)	1	
-42	2205752	. BEARING ASSY, Nose wheel crank up latch (18355)	1	
		(ATTACHING PARTS)		
	MS20365-428	. NUT	3	
-43	AN4-7	. BOLT	3	
		----*----		
-44	MS20365-1032	. NUT	1	
-45	AN3-5A	. BOLT	1	
-46	2126775	. SHAFT, Nose gear upper retracting (18355)	1	
-47	MS20365-1018C	. NUT	2	
-48	12B126	. NUT, Internal wrenching (72962)	2	
-49	AN960-816	. WASHER	2	
-50	AN960-1216	. WASHER	2	
-51	AN10-26	. BOLT	2	
	26-7053-1	. GEAR ASSY, Nose wheel	1	
-52	5278446	. . MUD GUARD INSTL, Nose gear retracting link (18355)	NP	
-53	5150259	. . MECHANISM ASSY, Nose wheel retracting (18355)	1	
		(for details see fig. 84)		
		(ATTACHING PARTS)		
	AN320-10	. . NUT	1	
	AN960-1016	. . WASHER	1	
	2276216-2	. . SPACER, Nose wheel mech. assy (18355)	1	
-54	AN30-38	. . BOLT	1	
		---*---		
-55	5122388	. . SNUBBER ASSY, Nose wheel (18355) (for details see fig. 85)	1	
		(ATTACHING PARTS)		
	AN320-6	. . NUT	1	
	AN960-616	. . WASHER	1	
	1026614G6-104	. . SPACER (18355)	1	
-56	AN26-29	. . BOLT	1	
	AN310-8	. . NUT	2	
	AN960-916	. . WASHER	2	
-57	2205415	. . STUD, Nose wheel (18355)	2	
		----*----		
-58	4278877	. . BRACE ASSY, Nose wheel side (alt 4201552 (18355))	2	
		(ATTACHING PARTS)		
	AN310-10	. . NUT	4	
	AN960-1016	. . WASHER	4	
-59	NAS60-17-5	. . BOLT	4	
		----*----		
-60	2129341	. . NUT, Shock absorber rotating arm lock (18355)	1	
-61	2129342	. . RING, Shock absorber rotating arm wedge upper (18355)	1	
-62	5129977	. . ARM, Nose wheel rotating mech. (18355)	1	
-63	2129343	. . RING, Shock absorber rotating arm wedge lower (18355)	1	
-64	1150416	. . KEY, Shock absorber rotating arm (18355)	1	
	5280335	. . BEAM ASSY, Nose wheel cross (alt 5280336 (18355))	1	
-65	5280335-6	. . . BEAM, Nose wheel cross (18355)	1	
-66	2277787	. . . BUSHING, Nose wheel cross (18355)	1	
-67	1127713	. . LEVER ASSY, Nose wheel position indicator (18355)	1	
		(ATTACHING PARTS)		
-68	AN320-8	. . NUT	2	
		----*----		

FIG. AND INDEX NO.	PART NUMBER	DESCRIPTION 1 2 3 4 5 6 7	UNITS PER ASSY	USABLE ON CODE
-69	143908-016S112-125	. . WASHER (18355)	1	
-70	2126671	. . EYE BOLT ASSY, NLG cross brace (18355)	1	
-71	4123685	. . COLLAR ASSY, Nose wheel strut (alt 4278839 (18355))	1	
	2126541	. . . BUSHING, Nose wheel collar (18355)	1	
-72	530024	. . WHEEL ASSY, NLG (01297)	1	
-73	COML	. . TUBE, Aircraft inner (GFE) (MIL-T-5014, Type 1, Class 1, Style S)	1	
-74	COML	. . CASING, Pneumatic, 36 in. 12 ply (GFE) (MIL-C-5041, Type 1)	1	
	5122384	. . STRUT ASSY, Nose wheel shock absorber (18355)	1	
-75	8239F	. . . STRUT ASSY, Aerol (13002) (for details see T.O. 4S2-3-3-501)	1	

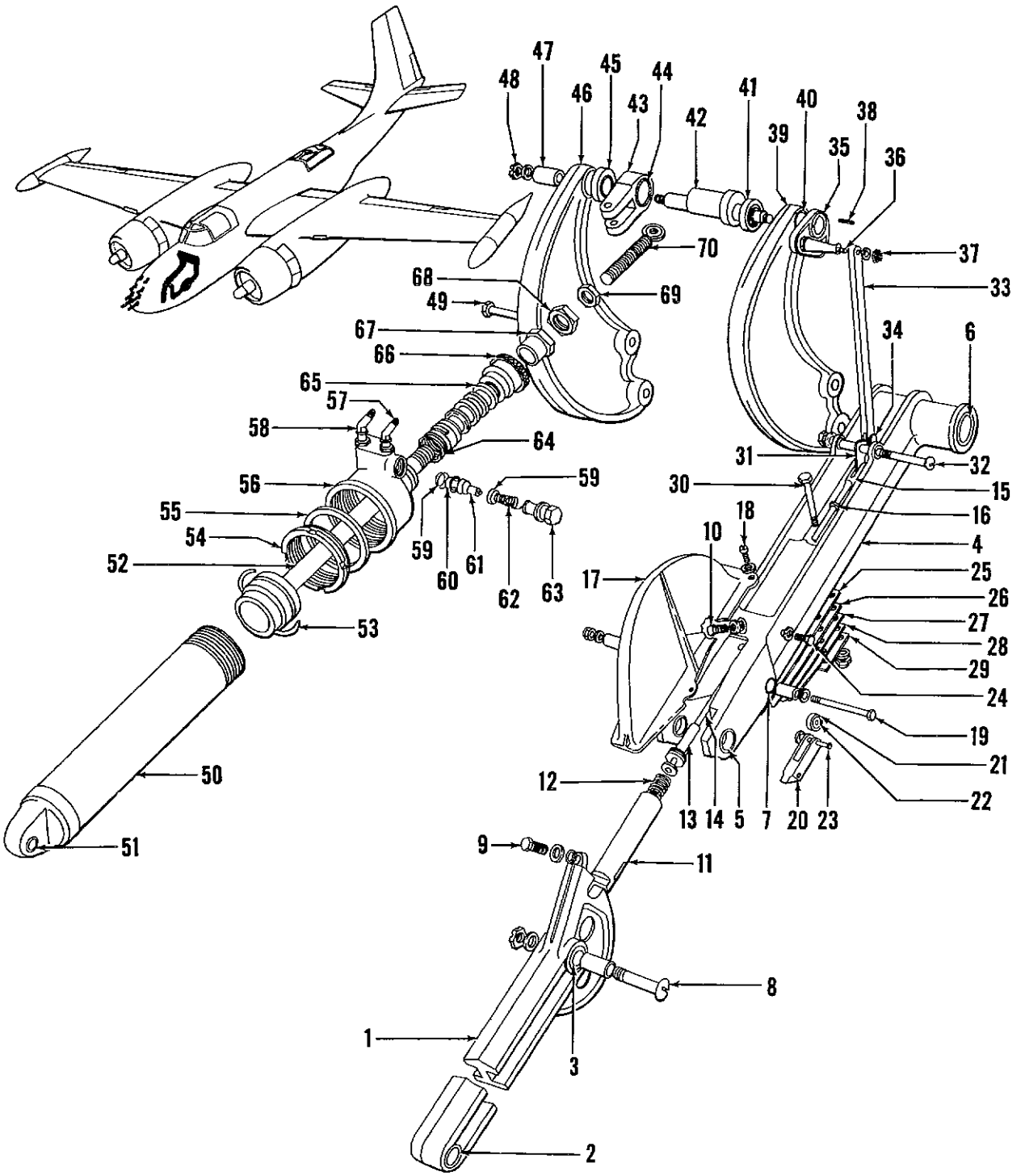

Figure 84. Nose Wheel Retracting Mechanism, and Actuating Cylinder Assemblies

FIG. AND INDEX NO.	PART NUMBER	DESCRIPTION 1 2 3 4 5 6 7	UNITS PER ASSY	USABLE ON CODE
84-		NOSE WHEEL RETRACTING MECHANISM, AND ACTUATING CYLINDER ASSY		
	5150259	. MECHANISM ASSY, Nose wheel retracting (18355) (for NHA see fig. 83)	REF	
	5127907	. . LINK ASSY, Nose wheel retracting lower (18355)	1	
-1	5127907-2	. . . LINK, Nose wheel retracting lower (18355)	1	
-2	116500-13A107G	. . . BUSHING, Aluminum bronze grooved (18355)	1	
-3	116500-13A119G	. . . BUSHING, Aluminum bronze grooved (18355)	1	
	5127946	. . LINK ASSY, Nose wheel retracting upper (18355)	1	
-4	5127946-2	. . . LINK, Nose wheel retracting upper (18355)	1	
-5	1127767	. . . BUSHING, Nose gear retracting upper (18355)	2	
-6	116500-20B108	. . . BUSHING, Brass (18355)	2	
-7	A407-2	. . . BEARING, Oilite (70417)	2	
-8	AN30-50	. . BOLT	1	
	2276216-4	. . SPACER, OD bearing (18355)	1	
	AN960-1016	. . WASHER	1	
	AN320-10	. . NUT	1	
-9	2207823	. . BOLT, Nose gear retracting link adjusting (18355)	1	
	2207824	. . WASHER, Nose gear retracting link adjusting (18355)	1	
	124682-7S12-065	. . WASHER, Chrome molybdenum steel (18355)	1	
-10	1151313	. . BOLT, Nose gear retracting link stop (18355)	1	
	124682-5S12-030	. . WASHER, Chrome molybdenum steel (18355)	1	
	2150832	. . LATCH ASSY, Nose wheel down (18355)	1	
-11	1151009	. . . LATCH, Nose wheel down (18355)	1	
-12	1150949	. . . SPRING, Nose wheel upper link lock plunger (18355)	1	
-13	1151008	. . . SLEEVE, Nose wheel down latch plunger (18355)	1	
-14	1150950	. . . PLUNGER ASSY, Nose wheel down latch (18355)	1	
-15	AN665-21R	. . TERMINAL	1	
-16	AN315-3R	. . NUT	1	
-17	4278148	. . COVER, Nose gear down latch (18355)	1	
		(ATTACHING PARTS)		
-18	AN501A10-7	. . SCREW	4	
	AN960D10	. . WASHER	4	
		----*----		
	1193811	. . LATCH ASSY, Nose wheel bungee (18355)	1	
		(ATTACHING PARTS)		
	AN310-3	. . NUT	1	
	124682-3S10-065	. . WASHER, Chrome molybdenum steel (18355)	2	
	1026614G3-101	. . SPACER, Steel OD bearing grease finish (18355)	2	
-19	AN23-50	. . BOLT	1	
		----*----		
-20	1193812	. . . LATCH, Nose wheel bungee (18355)	1	
	1193814	. . . ROLLER ASSY, Nose wheel bungee (18355)	1	
-21	1193813	. . . . ROLLER, Nose wheel bungee (18355)	1	
-22	A303-2	. . . . BUSHING, Oilite (70417)	1	
-23	MS20392-21	. . . PIN	1	
	AN960-10L	. . . WASHER	1	
-24	1206184	. . SCREW, Nose gear down latch set (18355)	1	
	AN960-416L	. . WASHER	1	
-25	1193808	. . LEAF, No. 1 nose wheel bungee spring (18355)	1	
-26	1193810	. . LEAF, No. 2 nose wheel bungee spring (18355)	1	
-27	1193809	. . LEAF, No. 3 nose wheel bungee spring (18355)	1	
-28	1193947	. . LEAF, No. 4 nose wheel bungee spring (18355)	1	
-29	1193954	. . CLAMP, Nose wheel bungee spring (18355)	1	
		(ATTACHING PARTS)		
	MS20365-1032	. . NUT	2	
	AN960-10	. . WASHER	2	
-30	AN3-13A	. . BOLT	2	
		----*----		
-31	2277826	. . LEVER ASSY, Nose wheel down latch release (18355)	1	
		(ATTACHING PARTS)		
	AN320-3	. . NUT	1	
	AN960-10	. . WASHER	1	
-32	AN23-38	. . BOLT	1	
		----*----		

FIG. AND INDEX NO.	PART NUMBER	DESCRIPTION 1 2 3 4 5 6 7	UNITS PER ASSY	USABLE ON CODE
84-33	1150974	. . ROD, Nose wheel down latch actuating (18355) (ATTACHING PARTS)	1	
-34	MS20392-11	. . PIN	2	
	AN960-10L	. . WASHER	1	
		----*----		
	1151007	. . STOP ASSY, Nose wheel down latch release (18355)	1	
-35	1151005	. . . STOP, Nose wheel down latch release (18355)	1	
-36	1151006	. . . ARM, Nose wheel down latch release (18355)	1	
-37	AN320-3	. . NUT	1	
	AN960D10	. . WASHER	1	
-38	1151369	. . KEY, Nose wheel down latch release (18355)	2	
	4277462	. . ARM ASSY, Nose wheel retracting LH (18355)	1	
-39	4277462-2	. . . ARM, Nose wheel retracting LH (18355)	1	
-40	2277914	. . . BEARING, Bronze (18355)	1	
-41	2277456	. . SPACER, Nose wheel down latch cam (18355)	1	
-42	2277430	. . CAM, Nose wheel down latch release (18355)	1	
	2277431	. . CLEVIS ASSY, Nose wheel actuating cylinder rod (18355)	1	
-43	2277431-2	. . . LINK, Nose wheel actuating cylinder rod (18355)	1	
-44	B1616X	. . . BEARING, Needle (60380)	1	
-45	2277433	. . SPACER, Nose wheel down latch cam (18355)	1	
	4277927	. . ARM ASSY, Nose wheel retracting RH (18355)	1	
-46	4277927-2	. . . ARM, Nose wheel retracting RH (18355)	1	
-47	2277915	. . . BEARING, Bronze (18355)	1	
-48	AN320-5	. . NUT	2	
	AN960-516	. . WASHER	2	
-49	111904-8-322N	. . BOLT, Shear or bearing (18355)	2	
	AN960-816	. . WASHER	2	
	MS20365-820	. . NUT	2	
	5122386	. CYLINDER ASSY, Nose wheel actuating (18355) (for NHA see fig. 83)	REF	
	5128480	. . BARREL ASSY, Nose wheel actuating cylinder (18355)	1	
-50	5128480-2	. . . BARREL, Nose wheel actuating cylinder (18355)	1	
-51	116500-9A024G	. . . BUSHING, Aluminum bronze grooved (18355)	1	
-52	5128574	. . PISTON ASSY, Nose wheel actuating cylinder (18355)	1	
-53	AN6227-35	. . PACKING	1	
-54	2150746	. . NUT, Nose wheel actuating cylinder external packing (18355)	1	
-55	1111908-304-310-188	. . GASKET, External seal ring neoprene (18355)	1	
-56	5128680	. . END, Nose wheel actuating cylinder (18355)	1	
-57	AN837-4D	. . ELBOW	1	
	AN924-4D	. . NUT	1	
	MS28778-4	. . GASKET	1	
-58	AN837-6D	. . ELBOW	1	
	AN924-6D	. . NUT	1	
	MS28778-6	. . GASKET	1	
-59	H107675-014	. . SEAT, Type A resilient valve (73324)	2	
-60	1128870	. . SPACER, Shuttle valve 3/8-in. (18355)	1	
-61	1128869	. . CONE, Shuttle valve 3/8-in. (18355)	1	
-62	1128871	. . SPRING, Shuttle valve 3/8-in. (18355)	1	
	143908-026TC102-064	. . GASKET (18355)	1	
-63	2129213	. . PLUG, Shuttle valve 3/8-in. (18355)	1	
-64	2129210	. . SPRING, Nose wheel actuating cylinder piston rod packing (18355)	1	
	AN6229-22	. . RING	1	
-65	AN6225-22	. . PACKING	4	
	1073530B104-008	. . RING, Bronze long packing (18355)	1	
-66	2129211	. . NUT, Nose wheel actuating cylinder piston rod packing (18355)	1	
-67	2129209	. . STOP NUT, Nose wheel actuating cylinder rod stop (18355)	1	
-68	1127790	. . LOCK NUT, Main landing gear actuating rod stop (18355)	1	
-69	AN316-12R	. . NUT	1	
-70	1128865	. . BOLT, Nose wheel actuating cylinder eye (18355)	1	

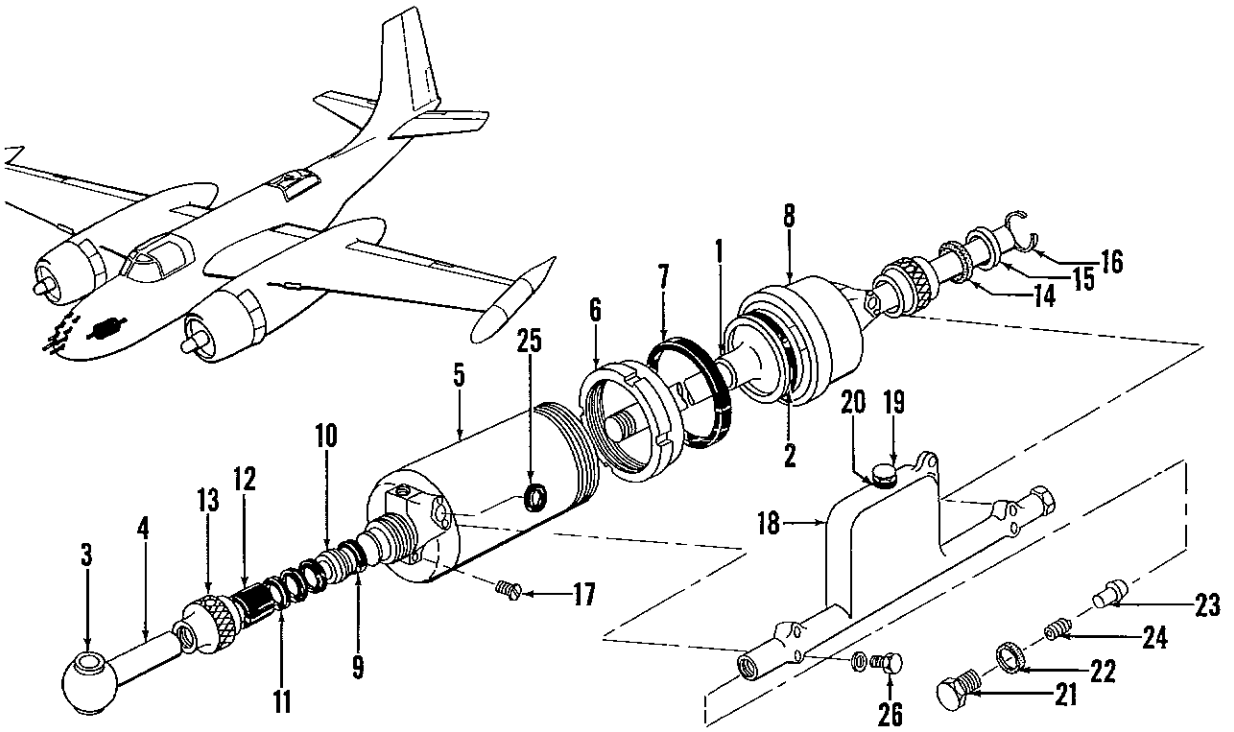

Figure 85. Nose Wheel Snubber Assembly

FIG. AND INDEX NO.	PART NUMBER	DESCRIPTION 1 2 3 4 5 6 7	UNITS PER ASSY	USABLE ON CODE
85-	5122388	SNUBBER ASSY, Nose wheel (18355) (for NHA see fig. 83)	REF	
	5150355	. CYLINDER ASSY, Nose wheel snubber (18355)	1	
-1	4129589	. . PISTON ASSY, Nose wheel snubber (18355)	1	
-2	AN6227-34	. . PACKING	1	
-3	2150765	. . END ASSY, Nose wheel snubber piston rod (18355)	1	
-4	1150576	. . . BUSHING, Nose wheel snubber piston rod end (18355)	2	
-5	4129561	. . BARREL ASSY, Nose wheel snubber (18355)	1	
-6	2150751	. . NUT, Nose wheel snubber end external packing (18355)	1	
-7	1111908-228-302-188	. . GASKET, External seal ring neoprene (18355)	1	
-8	2150750	. . END, Nose wheel snubber (18355)	1	
-9	1012953D024-008	. . RING, Center packing (18355)	2	
-10	AN6229-16	. . RING	4	
-11	AN6225-16	. . PACKING	8	
-12	1073530B024-008	. . RING, Long packing (18355)	2	
-13	4129556	. . NUT, Nose wheel snubber piston rod packing (18355)	2	
-14	2110163B012-100-003	. . WASHER, Gray felt (18355)	2	
-15	4113754-024	. . WIPER, Piston rod (18355)	2	
-16	2130661-104	. . RING, Internal lock (18355)	2	
-17	AN502-10-8	. SCREW	2	
	4129593	. MANIFOLD ASSY, Nose wheel snubber (18355)	1	
-18	5150244	. . MANIFOLD, Nose wheel snubber (18355)	1	
-19	1150917	. . PLUG, Nose wheel snubber reservoir (18355)	1	
-20	143908-016TC024-064	. . GASKET (18355)	1	
-21	2150766	. . PLUG, Nose wheel snubber poppet (18355)	2	
-22	143908-022TC030-064	. . GASKET (18355)	2	
-23	1150566	. . POPPET, Nose wheel snubber (18355)	2	
-24	1150911	. . SPRING, Nose wheel snubber poppet (18355)	2	
-25	1074724-016	. GASKET, Black neoprene hydraulic seal cup (18355)	2	
-26	AN3H13A	. BOLT	4	
	AN960D10	. WASHER	4	

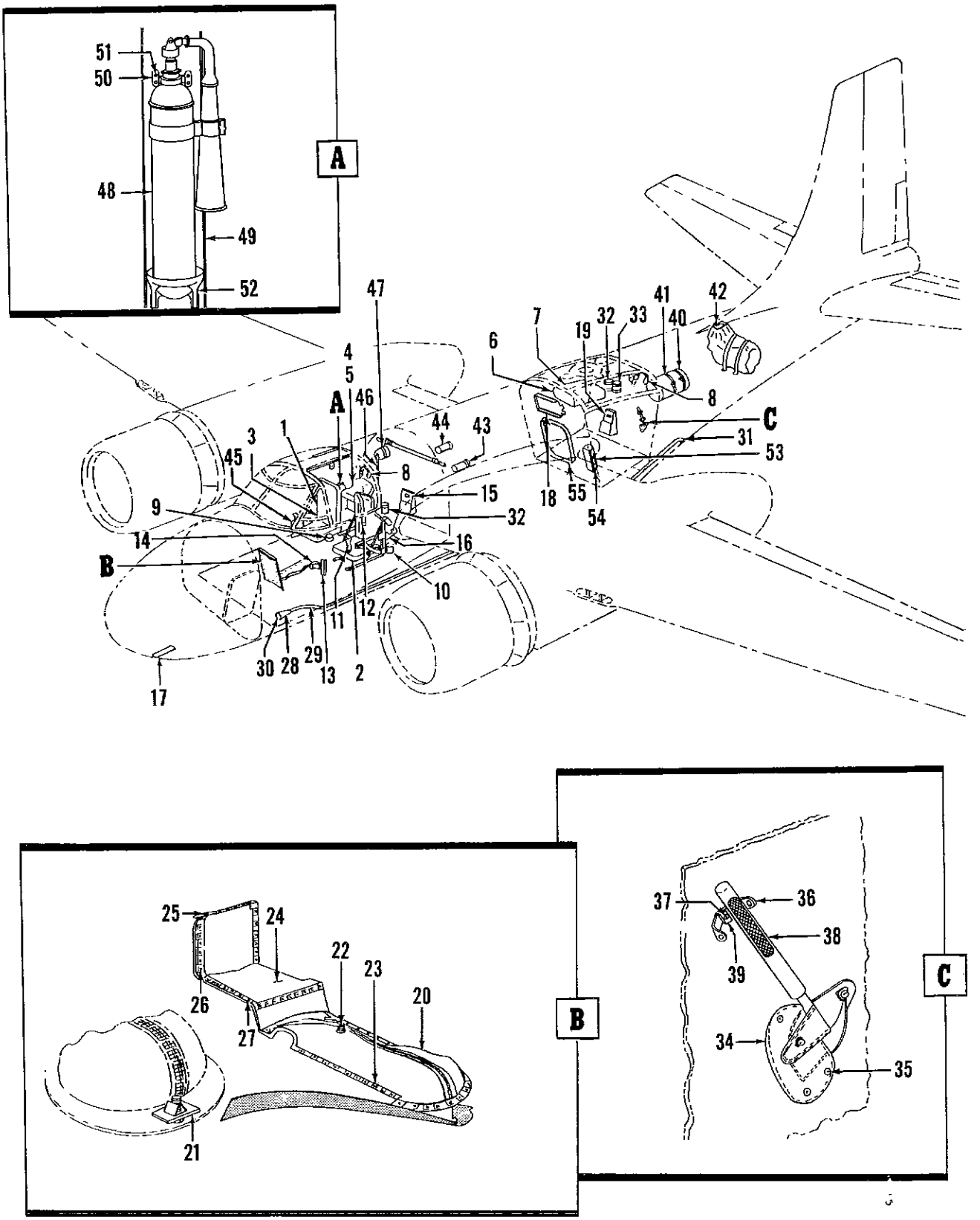

Figure 86. Fuselage Furnishings Installation

FIG. AND INDEX NO.	PART NUMBER	DESCRIPTION 1 2 3 4 5 6 7	UNITS PER ASSY	USABLE ON CODE
86-	26-9770-1	FURNISHINGS INSTL, Fuselage (altered from 5153227(18355)) (for NHA see fig. 4)	REF	
-1	26-9262-1	. CUSHION ASSY, Pilots seat	2	
-2	220C	. SEAT ASSY, Pilot's (83945) (for details see fig. 87)	1	
-3	26-9239-70	. SEAT ASSY, Co-pilot's (altered from 220C (83945) (for details see fig. 87)	1	
-4	5207307	. SEAT INSTL, Crewman's (18355) (for details see fig. 88)	1	
-5	NO NUMBER	. KIT INSTL, Improved crew escape (installed by T.O. 1B-26-173) (for details see fig. 89)	1	
-6	5202482	. COVER, Pilot's enclosure (18355)	1	
-6	26-9619-1	. STREAMER ASSY, Gear pins warning	3	
-6	4151268	. PIN, Safety, Nose landing gear (18355)	1	
-6	2153888	. LOCK, Safety, mainlanding gear down (18355)	2	
-6	2150868	. LOCK, Safety, bomb bay (18355)	4	
-6	2126700	. PAD, Jack, fuselage (18355)	2	
-7	2126974	. PAD, Jack, wing (18355)	4	
-7	AN48-10	. BOLT, Eye	2	
-7	AN315-8R	. NUT	2	
-7	5153689	. ROLL, Miscellaneous handling equipment (18355)	1	
-8	H78/A1C	. HEADSET AND MICROPHONE (49671) (for details see T.O. 12R2-2A1C10-4)	3	
-9	4760502	. ASH RECEIVER, Tobacco (91209)	1	
-10		. HYDRAULIC FLUID, Gallon (Spec MIL-O-5606)	1	
-11	44G5437	. BELT ASSY, Lap safety type B-14	4	
		(ATTACHING PARTS)		
	AN320-4	. NUT	4	
	AN960D416	. WASHER	4	
	AN24-14	. BOLT	4	
		----*----		
-12	44G5443	. STRAP ASSY, Shoulder harness safety type B-15	2	
	5204382	. LOAD ADJUSTER INSTL (18355)	1	
-13	A26B	. . LOAD ADJUSTER (18355)	1	
-14	2278047	. . BRACKET (18355)	1	
	5203512	. MAP CASE INSTL, Pilot (18355)	1	
-15	5151931	. . COMPARTMENT ASSY, Map case and glove (18355)	1	
	5195440	. FIRST AID KIT INSTL, Pilot and jump seat (18355)	1	
-16	42D7411	. KIT, First aid (18355)	2	
-17	26-9518-1	. STREAMER ASSY, Pilot cover	1	
-18	2195130	. GUARD, Bomb bay bulkhead aft (18355)	1	
		(ATTACHING PARTS)		
	A1179-10Z1	. NUT (78553)	14	
	AN530-8-6	. SCREW	14	
	A1179-10Z1	. NUT (78553)	2	
	AN530-8-8	. SCREW	2	
		----*----		
	5194625	. MAP CASE AND GLOVE COMPARTMENT INSTL, gunner (18355)	1	
-19	5151931	. COMPARTMENT ASSY, Map case and glove (18355)	1	
	5190575	. SEALING INSTL, Fuselage (18355)	1	
	5192501	. . CANVAS BOOT INSTL, Control pedestal (18355)	1	
-20	5192501-18	. . . BOOT ASSY (18355)	1	
		(ATTACHING PARTS)		
	A1778-8Z1	. . . NUT, Speed (78553)	22	
-21	AN530-8-8	. . . SCREW	22	
-22	1027301-8-9	. . . SCREW, Stell recessed (18355)	1	
	AN960D8	. . . WASHER	1	
	A6077-8Z3	. . . NUT, Speed (78553)	21	
-23	AN530-8-8	. . . SCREW	21	
		----*----		
-24	5192501-20	. . . BOOT ASSY (18355)	1	
		(ATTACHING PARTS)		
	MS20365-632	. . . NUT	18	
-25	AN227-4	. . . STUD	18	
	A1778-8Z	. . . NUT, Speed (78553)	7	
-26	AN530-8-8	. . . SCREW	7	
	A1778-8Z	. . . NUT, Speed (78553)	9	
	AN960D8	. . . WASHER	9	
-27	AN530-8-8	. . . SCREW	9	
		----*----		

FIG. AND INDEX NO.	PART NUMBER	DESCRIPTION 1 2 3 4 5 6 7	UNITS PER ASSY	USABLE ON CODE
86-	5276252	. TUBE INSTL, Pilot's relief (18355)	1	
-28	42A6504	. . HORN (GFE)	1	
-29	5276252-2	. . TUBE (18355)	1	
-30	33B4741	. . BRACKET (GFE)	1	
		(ATTACHING PARTS)		
	MS20365-832	. . NUT	3	
	AN960-8	. . WASHER	3	
	AN520-8-10	. . SCREW	3	
		----*----		
-31	623	. . VENTURI (GFE)	1	
	5194618	. BRACKET INSTL, Crew relief container (18355)	1	
-32	4195650	. . CONTAINER ASSY (18355)	4	
		(ATTACHING PARTS)		
	A1181-6Z	. . NUT, Speed (78553)	8	
	AN960D10	. . WASHER	8	
	AN530-6R8	. . SCREW	8	
	MS20365-1032	. . NUT	8	
	AN960-10	. . WASHER	8	
	AN526-1032R10	. . SCREW	8	
		----*----		
-33	1194838	. CONTAINER, Paper relief (18355)	4	
	5203206	. STOWAGE INSTL, Emergency fire axe (18355)	1	
-34	4203777	. . SHEATH ASSY, Emergency fire axe (18355)	2	
		(ATTACHING PARTS)		
	MS20365-1032	. . NUT	8	
	AN 960-10	. . WASHER	8	
-35	AN520-10R10	. . SCREW	8	
		----*----		
-36	1203778	. . STRAP ASSY, Emergency fire axe (18355)	2	
		(ATTACHING PARTS)		
	MS20365-1032	. . NUT	2	
	AN960-10	. . WASHER	2	
-37	1087510-10-10	. . SCREW (18355)	2	
		----*----		
-38	42D8331	. . AXE (18355)	2	
-39	1204109	. . PLATE (18355)	2	
-40	5128589	. COVER ASSY, Engine section (18355)	2	
-41	2028263-18-18	. STRAP ASSY (18355)	2	
		(ATTACHING PARTS)		
	MS20365-1032	. NUT	4	
	AN970-3	. WASHER	4	
	1027300-10-11	. SCREW (18355)	4	
		----*----		
	5205965	. CONTAINER ASSY, Dust excluder stowage (18355)	1	
-42	5205965-2	. CONTAINER (18355)	1	
	4143958	. EXCLUDER ASSY, Bomb bay vent dust (18355)	1	
	4278594	. EXCLUDER ASSY, Heat and vent air scoop dust (18355)	2	
	4204878	. EXCLUDER ASSY, Heat and vent air scoop dust (18355)	2	
	5203612	. EXCLUDER ASSY, Carburetor air intake (18355)	2	
	4203658	. EXCLUDER ASSY, Exhaust stack (18355)	18	
	5203536	. EXCLUDER ASSY, Oil cooler air intake (18355)	2	
	5195508	. LEVELING PIN INSTL (18355)	1	
	MS20365-1032	. . NUT	2	
	AN960D10	. . WASHER	4	
	2033901-7DR187-100	. . SPACER (18355)	2	
-43	AN23-28A	. . BOLT	2	
	MS20365-1032	. . NUT	2	
	AN960D10	. . WASHER	4	
	2033901-7DR187-100	. . SPACER (18355)	2	
-44	AN3-26A	. . BOLT	2	
-45	39D3922	. HOLDER ASSY, Pilot's check list (18355)	1	
	4143110	. FUNNEL ASSY, Hydraulic reservoir (18355)	1	
-46	4143110-2	. . SPOUT (18355)	1	
-47	4143110-4	. . FUNNEL (18355)	1	
-47	1143025	. . HOOK (18355)	1	
-48	28X1620	. EXTINGUISHER, Fire type 4TB (97876) (for details see T.O. 13F4-2-14)	1	

FIG. AND INDEX NO.	PART NUMBER	DESCRIPTION 1 2 3 4 5 6 7	UNITS PER ASSY	USABLE ON CODE
86-49	5153236-2	. SUPPORT, Fire extinguisher fuselage section (18355)	1	
		(ATTACHING PARTS)		
	MS20365-1032	. NUT	3	
	AN960D10	. WASHER	3	
	AN520-10R10	. SCREW	3	
		----*----		
-50	20507	. BRACKET, Upper (97876)	1	
		(ATTACHING PARTS)		
	MS20365-1032	. NUT	4	
	AN960-10	. WASHER	4	
-51	AN520-10R10	. SCREW	4	
		----*----		
-52	20932	. BRACKET, Lower (97876)	1	
		(ATTACHING PARTS)		
	MS20365-1032	. NUT	1	
	AN960-10	. WASHER	1	
	1029421-10-10	. SCREW (18355)	1	
		----*----		
-53	A20-0-51	. EXTINGUISHER, Fire type A20 (97876) (for details see T.O. 13R4-4-62)	1	
-54	4208110	. BRACKET ASSY (18355)	1	
		(ATTACHING PARTS)		
	MS20365-1032	. NUT	4	
	AN960-10	. WASHER	4	
	AN520-10R10	. SCREW	4	
		----*----		
-55	26-1205-1	. CURTAIN ASSY, Aft bomb bay enclosure	1	

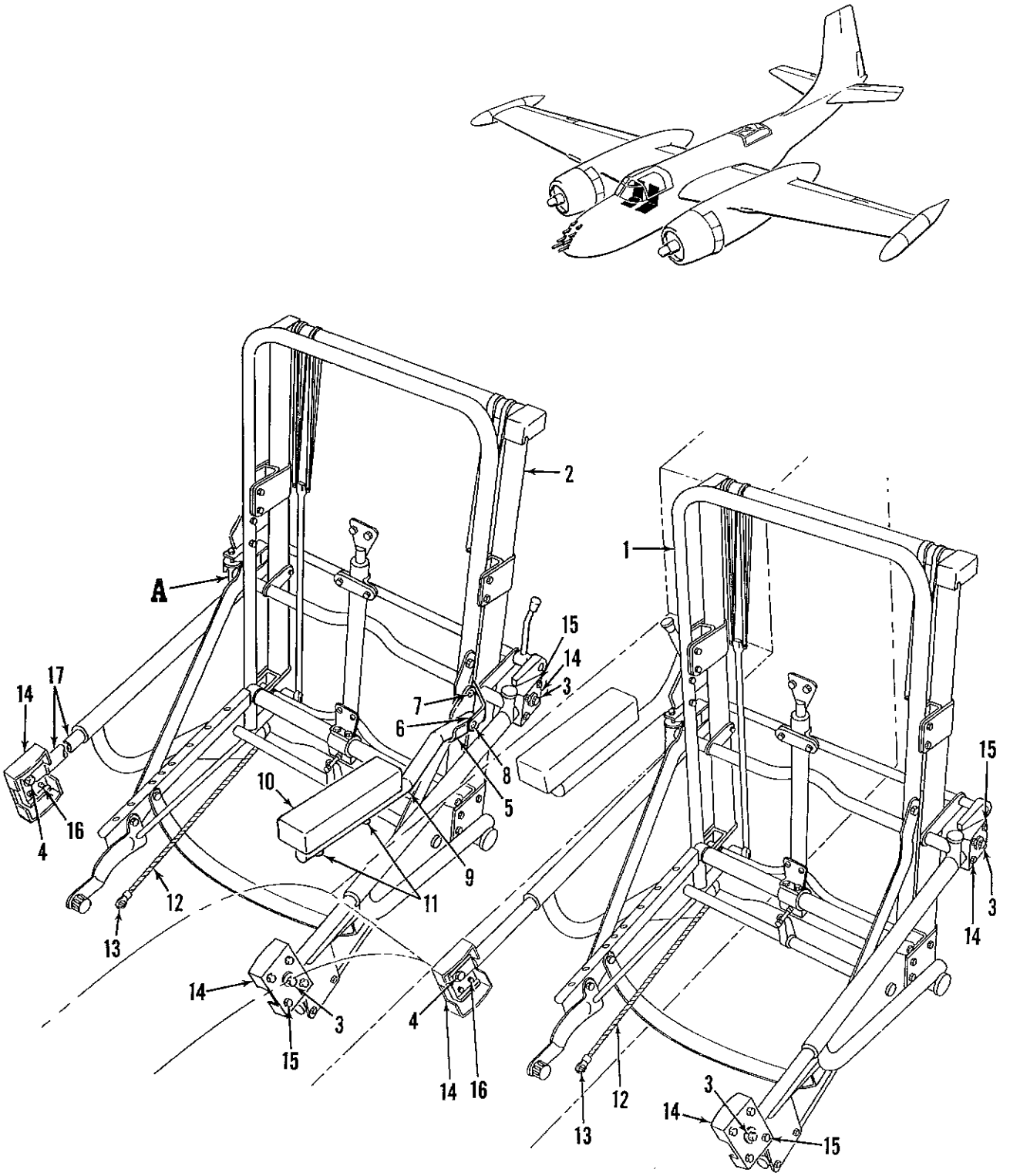

Figure 87. Pilot's and Co-Pilot's Seat Assemblies

FIG. AND INDEX NO.	PART NUMBER	DESCRIPTION 1 2 3 4 5 6 7	UNITS PER ASSY	USABLE ON CODE
87-		PILOT'S AND CO-PILOT'S SEAT ASSEMBLIES		
-1	220C	. SEAT ASSY, Pilot's (83945) (for NHA see fig. 86)	REF	
-2	26-9239-70	. SEAT ASSY, Co-pilot's (altered from 220C (83945)) (for NHA see fig. 86)	REF	
		(ATTACHING PARTS)		
	MS20365-428	. NUT	4	
	2033900-8S120-026	. SPACER (18355)	4	
	143908-008S116-125	. WASHER	4	
-3	AN4-16A	. BOLT	4	
	MS20365-428	. NUT	4	
	2033900-8S120-023	. SPACER (18355)	4	
	143908-008S116-125	. WASHER (18355)	4	
	1151055	. WASHER (18355)	4	
-4	AN4-16A	. BOLT	4	
		----*----		
-5	26-9329-71	. . STOP, Co-pilot's arm rest assy	1	
-6	26-9329-72	. . CHANNEL, Co-pilot's arm rest assy	1	
	26-9329-73	. . ARM REST ASSY, Co-pilot's	1	
		(ATTACHING PARTS)		
	MS20365-428	. . NUT	2	
	AN960-416	. . WASHER	2	
-7	AN509R416-31	. . SCREW	1	
-8	AN509R416-48	. . SCREW	1	
		----*----		
-9	26-9329-74	. . . ARM ASSY, Copilot's arm rest	1	
-10	26-9329-77	. . . REST ASSY, Copilot's arm rest	1	
		(ATTACHING PARTS)		
-11	AN515-8R22	. . . SCREW	2	
		----*----		
-12	2203284	. CORD ASSY (18355)	2	
		(ATTACHING PARTS)		
	MS20365-832	. NUT	2	
	AN960D8	. WASHER	2	
-13	AN515-8-8	. SCREW	2	
		----*----		
-14	2159681	. MOUNT, Resilient (18355) (altered from 423 (76005))	8	
		(ATTACHING PARTS)		
	MS20365-1032	. NUT	32	
	AN960D10	. WASHER	32	
-15	AN3-4A	. BOLT	16	
-16	AN3-5A	. BOLT	16	
		----*----		
-17	26-9229-1	. ROD, Co-pilot's seat support	1	
		(ATTACHING PARTS)		
	MS20365-1032	. NUT	2	
	AN960-10	. WASHER	2	
	AN520-10-20	. SCREW	2	
		----*----		

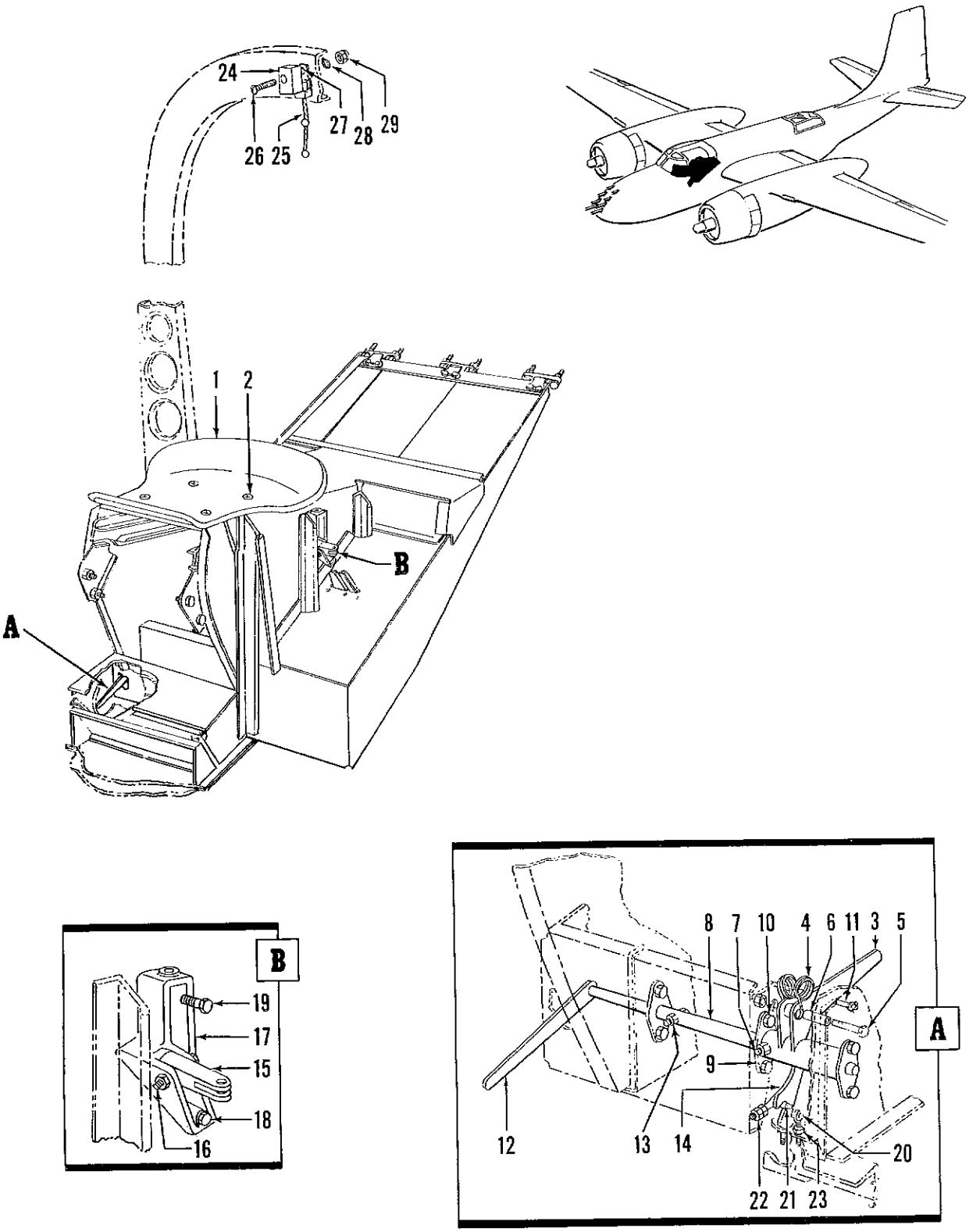

Figure 88. Forward Gunner Seat Installation

FIG. AND INDEX NO.	PART NUMBER	DESCRIPTION 1 2 3 4 5 6 7	UNITS PER ASSY	USABLE ON CODE
88-	5207307	SEAT INSTL, Forward gunner (Mod. by 1B-26-137)(18355)(for NHA see fig. 86)	REF	
	5207614	. SEAT ASSY, Forward gunner's (18355)	1	
-1	5157231	. . SEAT, Forward gunner (18355)	1	
		(ATTACHING PARTS)		
	MS20365-1032	. . NUT	4	
-2	1087510-10-10	. . SCREW (18355)	4	
		----*----		
-3	2193749	. . HANDLE, Forward gunner access door latch outer (18355)	1	
-4	1193965	. . SPRING, Forward gunner (18355)	1	
	MS20365-1032	. . NUT	1	
	AN960-10	. . WASHER	1	
-5	AN3-13A	. . BOLT	1	
-6	2033900-5S049-031	. . TUBE, Chromium molybdenum steel (18355)	1	
	MS20365-1032	. . NUT	1	
-7	AN3-12A	. . BOLT	1	
-8	1190101	. . SHAFT, Forward gunner access door latch (18355)	1	
-9	1190104	. . BEARING, Forward gunner access door latch (18355)	3	
	MS20365-1032	. . NUT	6	
-10	AN3-6A	. . BOLT	6	
-11	1190154	. . TUBE, Forward gunner access door latch (18355)	1	
-12	1190102	. . HANDLE, Forward gunner access door latch (18355)	1	
	MS20365-1032	. . NUT	1	
-13	AN3-7A	. . BOLT	1	
-14	1193964	. . HOOK, Forward gunner access door latch (18355)	1	
-15	2207366	. . LINK, Safety belt connector (18355)	2	
	MS20365-428	. . NUT	1	
	AN960-416L	. . WASHER	1	
-16	AN4-16A	. . BOLT	1	
-17	2207365	. . BRACKET ASSY, Safety belt attachment LH (18355)	1	
	2207365-1	. . BRACKET ASSY, Safety belt attachment RH (18355)	1	
		(ATTACHING PARTS)		
	MS20365-1032	. . NUT	2	
	AN960-10L	. . WASHER	2	
-18	AN3-7A	. . BOLT	2	
	MS20365-1032	. . NUT	4	
	AN960-10L	. . WASHER	4	
-19	AN3-10A	. . BOLT	4	
		----*----		
-20	1190125	. LUG, Forward gunner access door latch (18355)	2	
	1190126	. PIN, Forward gunner access door latch (18355)	1	
-21	2207641	. PIN, Forward gunner access door latch (18355)	1	
-22	MS20365-1032	. NUT	2	
	MS20365-1032	. NUT	2	
	AN960D10	. WASHER	2	
	AN960-10L	. WASHER	2	
-23	AN315-3R	. NUT	2	
	AN960D10	. WASHER	2	
-24	1199601	. BLOCK, Forward gunner seat support latch (18355)	1	
-25	2196636	. CABLE ASSY, Forward gunner seat support latch (18355)	1	
-26	AN526-1032-26	. SCREW	1	
-27	2033900-5S049-003	. SPACER (18355)	1	
-28	AN960D10	. WASHER	1	
-29	MS20365-1032	. NUT	1	

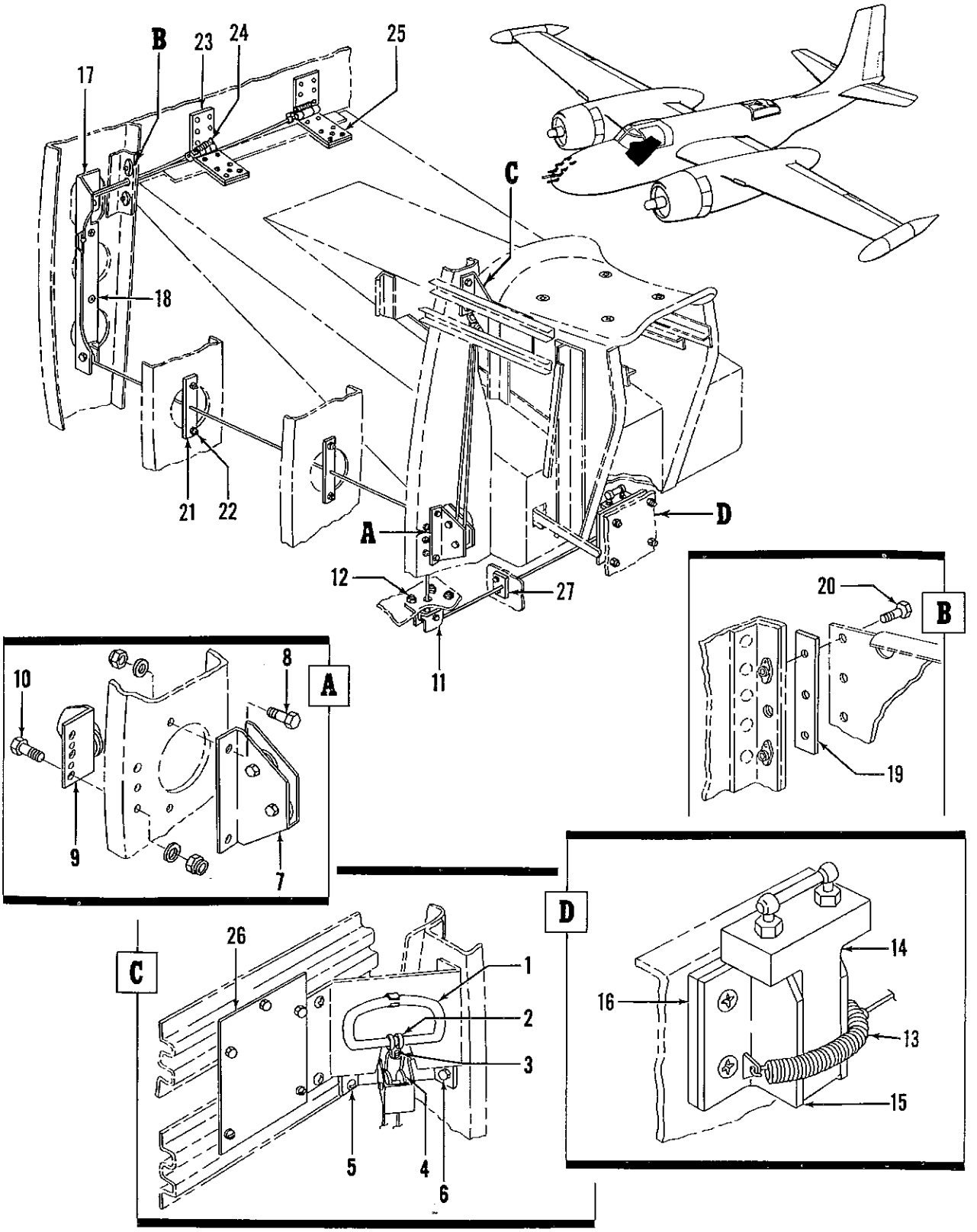

Figure 89. Improved Crew Escape Kit Installation

FIG. AND INDEX NO.	PART NUMBER	DESCRIPTION 1 2 3 4 5 6 7	UNITS PER ASSY	USABLE ON CODE
89-	NO NUMBER	KIT INSTL, Improved crew escape (installed by T.O. 1B-26-173) (for NHA see fig. 86)	1	
-1	51B647	. CABLE ASSY, Release escape seat (U.S.A.F.)	1	
-2	AN742-8C	. CLAMP	1	
-3	AN520-10-7	. SCREW	1	
	MS20365-1032	. NUT	1	
-4	51B653	. PULLEY ASSY, Release cable sta 86 escape upper (USAF)	1	
-5	AN526-1032-8	. SCREW	2	
-6	AN3-5A	. BOLT	2	
	AN960-10	. WASHER	2	
	MS20365-1032	. NUT	2	
-7	51B656	. PULLEY ASSY, Release cable sta 88 escape seat fwd (USAF)	1	
-8	AN3-5A	. BOLT	2	
	AN960-10	. WASHER	2	
	MS20365-1032	. NUT	2	
-9	51B663	. PULLEY ASSY, Release cable sta 88 escape seat lower aft (USAF)	1	
-10	AN3-11A	. BOLT	3	
	AN960-10	. WASHER	3	
	MS20365-1032	. NUT	3	
-11	51B667	. PULLEY ASSY, Release cable escape seat (USAF)	1	
-12	AN3-4A	. BOLT	4	
	AN960-10	. WASHER	4	
	MS20365-1032	. NUT	4	
-13	26-9269-1	. SPRING, Jump seat tension	1	
-14	51B671	. LATCH ASSY, Access door escape seat (USAF)	1	
-15	51B675L	. BRACKET, Latch access door escape seat (USAF)	1	
	51B675R	. BRACKET, Latch access door escape seat (USAF)	1	
-16	51A676	. PLATE, Latch access door escape seat (USAF) (ATTACHING PARTS)	1	
	AN509-10R16-14	. SCREW	4	
	AN960-10	. WASHER	4	
	MS20365-1032	. NUT ----*----	4	
-17	51C678	. PULLEY ASSY, Release cable sta 120 escape seat (USAF)	1	
-18	AN507-1032R14	. SCREW	2	
	AN960-10	. WASHER	2	
	MS20365-1032	. NUT	2	
-19	51B685	. FAIRLEAD, Release cable sta 120 escape seat (USAF)	1	
-20	AN3-7A	. BOLT	2	
-21	51B677	. FAIRLEAD, Release cable sta 97 and 105 escape seat (USAF) (ATTACHING PARTS)	2	
-22	AN3-5A	. BOLT	4	
	AN960-10	. WASHER	4	
	MS20365-1032	. NUT ----*----	4	
-23	2119391-2	. HINGE, Female (18355) (ATTACHING PARTS)	2	
	AN510-10R14	. SCREW	5	
	AN960-10	. WASHER	5	
	MS2-365-1032	. NUT ----*----	5	
-24	AN520-10R16	. SCREW	2	
	51B692	. CLIP, Safety release cable escape seat (USAF)	2	
-25	2119464-2	. HINGE, Male (18355) (ATTACHING PARTS)	2	
	AN510-10R11	. SCREW	7	
	AN960-10	. WASHER	7	
	MS20365-1032	. NUT ----*----	7	
	51A686	. SPACER, Male hinge access door escape seat (USAF)	1	
-26	51C646	. BRACKET ASSY, Release handle escape seat (USAF) (ATTACHING PARTS)	1	
	AN526-1032-8	. SCREW	2	
	AN3-5A	. BOLT	3	
	AN960-10	. WASHER	3	
	MS20365-1032	. NUT ----*----	3	
-27	51A670	. FAIRLEAD, Release cable lower box structure (USAF) (ATTACHING PARTS)	1	
	AN3-5A	. BOLT	2	
	AN960-10	. WASHER	2	
	MS20365-1032	. NUT ----*----	2	

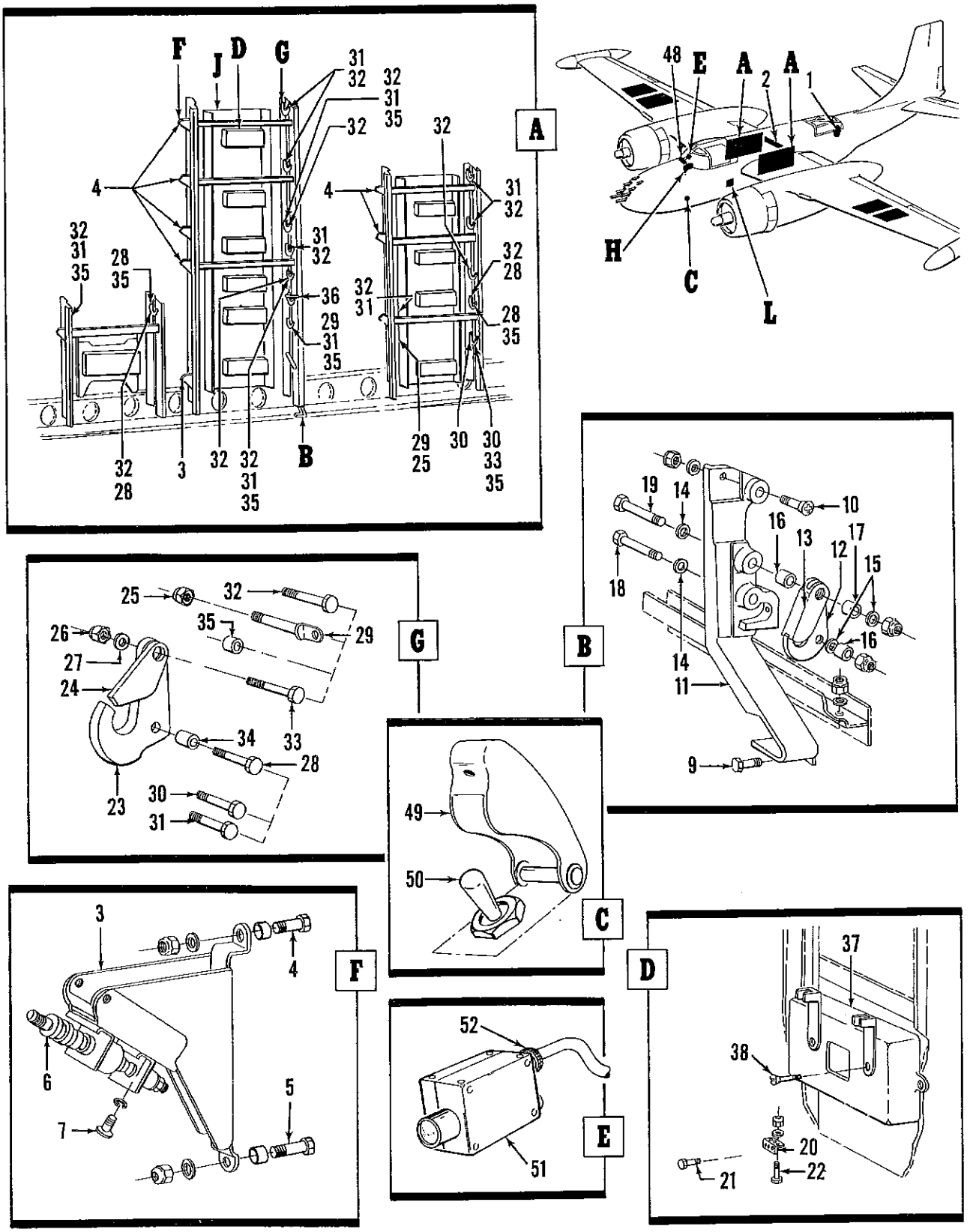

Figure 90. Fuselage Armament Installation (Sheet 1 of 2)

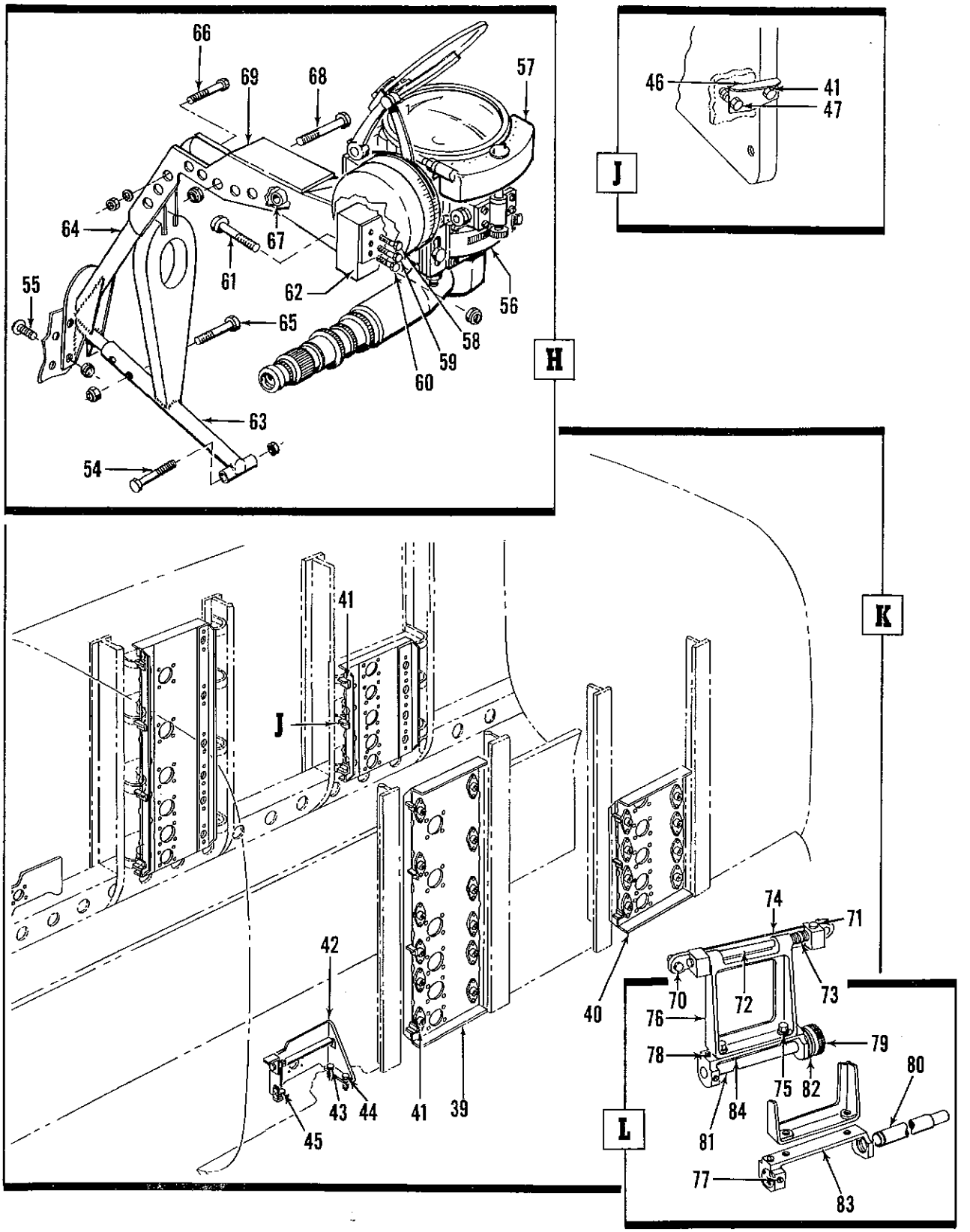

Figure 90. Fuselage Armament Installation (Sheet 2 of 2)

FIG. AND INDEX NO.	PART NUMBER	DESCRIPTION 1 2 3 4 5 6 7	UNITS PER ASSY	USABLE ON CODE
90-	26-11001	ARMAMENT INSTL, Fuselage (for NHA see fig. 2)	REF	
-1	26-11003	. EQUIPMENT INSTL, Fuselage pneumatic, gun charging (for details see fig. 94)	NP	
	26-11001-1	. ARMAMENT INSTL, Fuselage nose (altered from 5205772 less 5153278 (18355))	NP	
-2	512275	. . BOMB HOIST INSTL (18355) (for details see fig. 91)	NP	
	5150073	. . UNIT INSTL, Bomb rack fusing (18355)	NP	
-3	4155720	. . . SUPPORT ASSY, Bomb rack selective fusing unit (18355) (ATTACHING PARTS)	14	
	MS20365-1032	. . . NUT	28	
	AN960D10	. . . WASHER	28	
	138275-6-18	. . . SPACER (18355)	14	
-4	AN3-5A	. . . BOLT	14	
	138275-6-56	. . . SPACER (18355)	14	
-5	AN3-15A	. . . BOLT	14	
		----*----		
-6	43B9887	. . . CONTROL, Bomb arming type AN-A-2 (GFE) (ATTACHING PARTS)	14	
	AN935-10L	. . . WASHER	56	
-7	AN501A10-8	. . . SCREW	56	
		----*----		
	5205755	. . RAIL INSTL, Removable bomb (18355)	NP	
	5205756	. . . RAIL ASSY, Removable bomb LH (18355)	1	
	5205756-1	. . . RAIL ASSY, Removable bomb RH (18355) (ATTACHING PARTS)	1	
	MS20365-428	. . . NUT	5	
	AN960D416	. . . WASHER	5	
-8	AN4-6A	. . . BOLT	3	
-9	AN4-7A	. . . BOLT	1	
		----*----		
-10	1029421-416-12	. . . SCREW, Flathead 100° recessed (18355)	1	
-11	5205756-2	. . . . RAIL, LH (18355)	1	
	5205756-3	. . . . RAIL, RH (18355)	1	
-12	43A12153	. . . . HOOK, Bomb rack carrying (18355)	1	
-13	43A10571	. . . . LATCH ASSY, Bomb rack carrying hook (18355) (ATTACHING PARTS)	1	
	MS20365-624	. . . . NUT	2	
-14	AN960-616	. . . . WASHER	2	
-15	AN960D616	. . . . WASHER	2	
-16	1205670	. . . . SPACER	2	
-17	1205602	. . . . SPACER	1	
-18	AN6-11A	. . . . BOLT	1	
-19	AN6-13A	. . . . BOLT	1	
		----*----		
-20	1150923	. . . CLIP, Removable bomb rail lower (18355) (ATTACHING PARTS)	1	
	MS20365-428	. . . NUT	3	
	AN960D416	. . . WASHER	3	
-21	AN4-6A	. . . BOLT	2	
-22	AN4-7A	. . . BOLT	1	
		----*----		
-23	43A12153	. . HOOK, Bomb rack carrying (18355)	46	
-24	43A10571	. . LATCH ASSY, Bomb rack carrying hook (18355)	46	
-25	MS20364-624	. . NUT	2	
-26	MS2035-624	. . NUT	AR	
-27	AN960-616	. . WASHER	AR	
-28	AN6-13A	. . BOLT	AR	
-29	2206796	. . BOLT, Fragmentation bomb rack tie down eye (18355)	2	
-30	AN6-22A	. . BOLT	2	
-31	AN6-12A	. . BOLT	AR	
-32	AN6-14A	. . BOLT	AR	
-33	AN6-21A	. . BOLT	2	
-34	1205670	. . SPACER, Bomb rack hook latch (18355)	92	
-35	1205602	. . SPACER, Bomb rack hook latch outer (18355)	46	
-36	33D5226	. . SHACKLE ASSY, Bomb type B7 (GFE)	16	

FIG. AND INDEX NO.	PART NUMBER	DESCRIPTION 1 2 3 4 5 6 7	UNITS PER ASSY	USABLE ON CODE
90-37	43G19840L	. . RELEASE ASSY, Bomb rack LH type A4 (GFE)	8	
	43G19840R	. . RELEASE ASSY, Bomb rack RH type A4 (GFE)	8	
		(ATTACHING PARTS)		
-38	AN502-416-8	. . SCREW	16	
		----*----		
	5204984	. . RACK INSTL, Demolition bomb (18355)	1	
-39	5204794	. . PANEL ASSY, Forward bomb rack LH (18355)	NP	
	5204794-1	. . PANEL ASSY, Forward bomb rack RH (18355)	1	
-40	5204884	. . PANEL ASSY, Rear bomb rack LH (18355)	1	
	5204884-1	. . PANEL ASSY, Rear bomb rack RH (18355)	1	
		(ATTACHING PARTS)		
	MS20365-1032	. . NUT	16	
	AN960D10	. . WASHER	16	
-41	AN3-4A	. . BOLT	16	
		----*----		
-42	5204792	. . . SUPPORT ASSY, Forward bomb rack sta 128 LH (18355)	1	
	5204792-1	. . . SUPPORT ASSY, Forward bomb rack sta 128 RH (18355)	1	
		(ATTACHING PARTS)		
	MS20365-1032	. . . NUT	6	
	AN960D10	. . . WASHER	6	
-43	AN3-5A	. . . BOLT	2	
-44	AN3-10A	. . . BOLT	2	
-45	AN3-7A	. . . BOLT	2	
		----*----		
-46	1192259	. . . SUPPORT ASSY, Rear bomb rack sta 150 lower LH (18355)	1	
	1192259-1	. . . SUPPORT ASSY, Rear bomb rack sta 150 lower RH (18355)	1	
		(ATTACHING PARTS)		
	MS20365-428	. . . NUT	2	
	AN960D1416L	. . . WASHER	2	
-47	AN4-11A	. . . BOLT	2	
		----*----		
-48	26-2604-400	. . PANEL ASSY, Armament control sta 34 (for details see fig. 93)	1	
		(ATTACHING PARTS)		
	NAS220-8	. . SCREW	7	
		----*----		
-49	MS25224-1	. . GUARD, Switch	1	
-50	MS35058-22	. . SWITCH, Armament over-ride	1	
		(ATTACHING PARTS)		
	AN526-632R6	. . SCREW	2	
		----*----		
-51	KB3	. . CAMERA, Motion picture (93319) (for details see T.O. 10A1-2-5-1)	1	
		. . CONNECTOR	1	
-52	MS3106A16S1S	. . CONNECTOR	1	
-53	MS3106-14S3S	. SUPPORT ASSY, Gunsight instl, MK20 mod 4, sta 10.38 to 31.48	1	
	26-9257-1	. . NUT	1	
	MS20365-428A	. . WASHER	2	
	AN960-416	. . BOLT	1	
-54	AN4-30A	. . NUT	4	
	MS20365-1032A	. . WASHER	8	
	AN960-10	. . SCREW	4	
-55	NAS221-7	. . BRACKET, Lamp, gunsight	1	
-56	26-11004-1	. . GUNSIGHT, MK20 mod 4 (GFE)	1	
-57	NO NUMBER	(ATTACHING PARTS)		
		. . NUT	4	
	MS20365-624	. . WASHER	4	
	AN960-616L	. . BOLT	2	
-58	AN6-13A	. . BOLT	2	
-59	AN6-17A	. . NUT	2	
	MS20365-524	. . WASHER	2	
	AN960-516L	. . BOLT	2	
		----*----		
	MS20365-524	. . NUT	2	
	AN960-516L	. . WASHER	4	
-61	AN5-13A	. . BOLT	2	

FIG. AND INDEX NO.	PART NUMBER	DESCRIPTION 1 2 3 4 5 6 7	UNITS PER ASSY	USABLE ON CODE
90-62	26-9257-17	. . PLATE	1	
-63	26-9257-7	. . SUPPORT ASSY	1	
-64	26-9257-5	. . SUPPORT ASSY	1	
		(ATTACHING PARTS)		
	MS20365-1032A	. . NUT	2	
	AN960-10	. . WASHER	4	
-65	AN3-11A	. . BOLT	2	
	MS20365-1032A	. . NUT	6	
	AN960-10	. . WASHER	12	
-66	AN3-13A	. . BOLT	6	
		----*----		
-67	26-9257-25	. . SPACER	1	
	MS20365-1032A	. . NUT	3	
	AN960-10	. . WASHER	6	
-68	AN3-13A	. . BOLT	3	
-69	26-9257-3	. . CHANNEL ASSY	1	
	5209741	. FIXTURE INSTL, Bomb bay boresighting (18355)	NP	
	3209798	. . FIXTURE ASSY, Bomb bay boresighting (18355)	2	A
	3277849	. . FIXTURE ASSY, Bomb bay boresighting (18355)	2	B
		(ATTACHING PARTS)		
	MS20365-1032	. . NUT	2	A, B
	AN960-10	. . WASHER	2	A, B
-70	AN3-5A	. . BOLT	2	A, B
		----*----		
-71	AN393-27	. . . PIN (18355)	1	A, B
-72	2209754	. . . SHAFT, Bomb bay boresighting fixture (18355)	1	A, B
-73	2209757	. . . SPRING, Bomb bay boresighting fixture (18355)	1	A, B
-74	4209756	. . . BASE, Bomb bay boresighting fixture (18355)	1	A, B
	MS20365-1032	. . . NUT	2	A, B
	AN3-10	. . . WASHER	2	A, B
-75	AN3-7A	. . . BOLT	2	A, B
-76	4209755	. . . FIXTURE, Bomb bay boresighting (18355)	1	A, B
-77	AN565B10-4	. . . SCREW	4	A
-78	AN565B10-5	. . . SCREW	4	B
-79	SP5097	. . . COUPLING (06650)	1	B
-80	2209753	. . . TUBE, Bomb bay boresighting fixture (18355)	1	A
	2276163	. . . SHAFT ASSY, Bomb bay boresighting fixture (18355)	1	B
-81	2276164	. . . . SHAFT, Bomb bay boresighting fixture (18355)	1	B
-82	SP5096	. . . . FLANGE (06650)	1	B
-83	4209752	. . . SUPPORT, Bomb bay boresighting fixture tube (18355)	1	A
-84	4277867	. . . SUPPORT, Bomb bay boresighting fixture tube (18355)	1	B
		A - USAF 17641 thru 17646, 17648 thru 17649, 17651, 17653 thru 17655, 17657, 17659, 17661 thru 17767, 17672 thru 17679		
		B - USAF 17640, 17647, 17650, 17652, 17656, 17658, 17660, 17668 thru 17671		

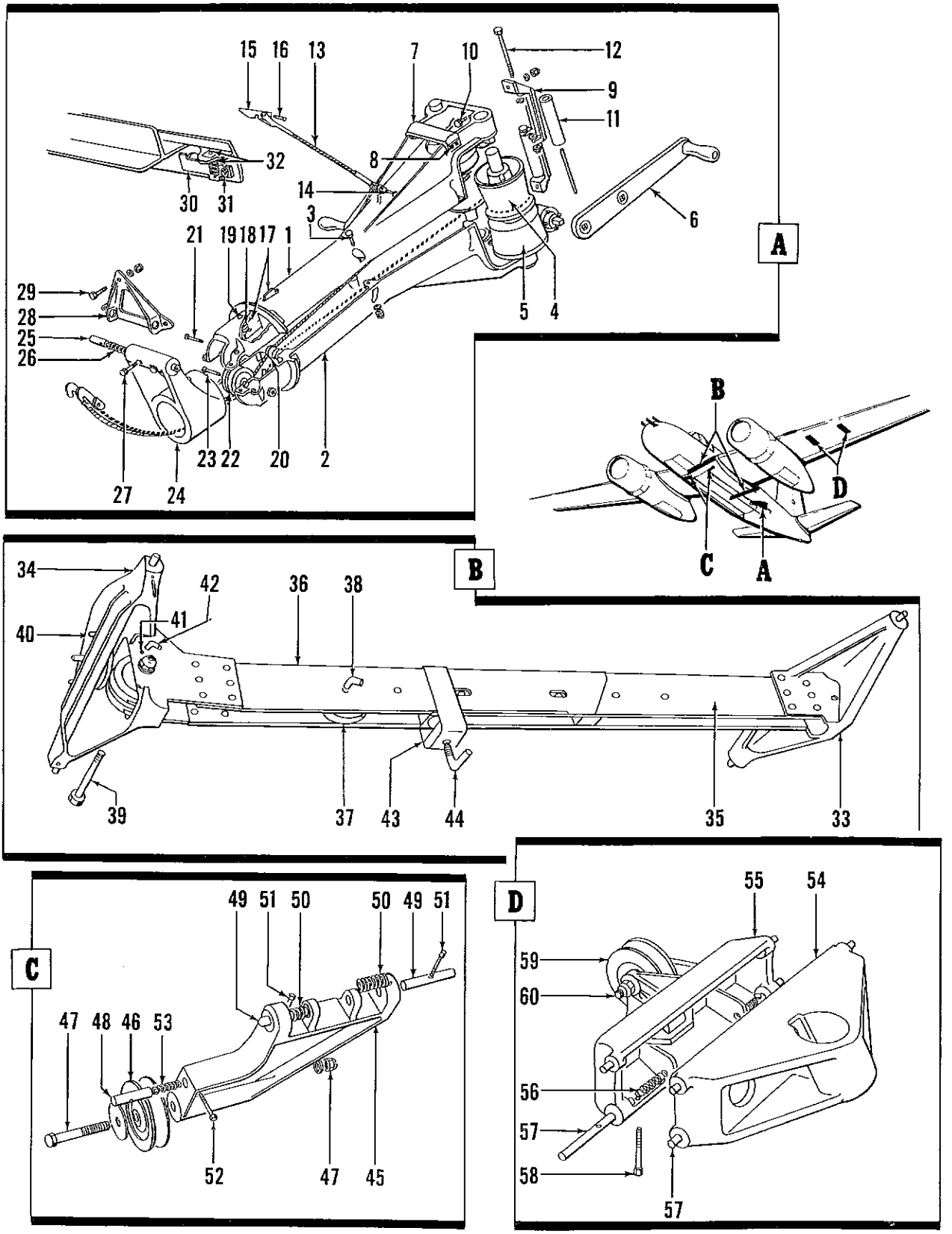

Figure 91. Bomb Hoist Installation

FIG. AND INDEX NO.	PART NUMBER	DESCRIPTION 1 2 3 4 5 6 7	UNITS PER ASSY	USABLE ON CODE
91-	5122275	BOMB HOIST INSTL (18355) (for NHA see fig. 90)	REF	
	5122277	. HOIST ASSY, Bomb (18355)	1	
-1	5125606-2	. . HOUSING ASSY, Bomb hoist upper (18355)	1	
-2	5125606-4	. . HOUSING ASSY, Bomb hoist lower (18355)	1	
		(ATTACHING PARTS)		
	MS20365-1032	. . NUT	8	
	AN960D10	. . WASHER	8	
-3	AN3-6A	. . BOLT	8	
		----*----		
	5152260	. . WINDLASS, Demolition bomb hoist LH (18355)	1	
	5152260-1	. . WINDLASS, Demolition bomb hoist RH (18355)	1	
-4	2151697	. . . DRUM, Demolition bomb hoist windlass (18355)	1	
-5	36H5311	. . . HOIST ASSY, Bomb type C3 (GFE)	1	
	1151470	. . . CLAMP, Demolition bomb hoist cable (18355)	1	
		(ATTACHING PARTS)		
	MS20365-428	. . . NUT	1	
		----*----		
-6	5122277-2	. . HANDLE, Bomb hoist (18355)	1	
-7	5122277-4	. . PLATE, Bomb hoist handle (18355)	2	
		(ATTACHING PARTS)		
	MS20365-632	. . NUT	8	
	AN960-10	. . WASHER	8	
-8	AN515-6-12	. . SCREW	8	
		----*----		
-9	5123455	. . SUPPORT, Bomb hoist roller (18355)	1	
		(ATTACHING PARTS)		
	MS20365D428	. . NUT	2	
	AN960D416	. . WASHER	2	
-10	AN4DD6A	. . BOLT	2	
		----*----		
-11	1151354	. . ROLLER ASSY, Bomb hoist cable (18355)	2	
		(ATTACHING PARTS)		
	AN320-3	. . NUT	2	
	1026614G3-229	. . SPACER (18355)	2	
	AN960-516	. . WASHER	4	
-12	AN3-42	. . BOLT	2	
		----*----		
-13	2158542	. . CABLE ASSY, Bomb hoist supporting (18355)	1	
		(ATTACHING PARTS)		
-14	AN393-25	. . PIN	1	
		----*----		
-15	1156780	. . . FITTING (18355)	1	
-16	AN393-13	. . . PIN	1	
-17	2123217	. . LEVER (18355)	1	
-18	1122812	. . SPRING (18355)	1	
-19	1122811	. . PIN (18355)	1	
-20	FL3C6	. . BEARING, Ball (86174)	2	
		(ATTACHING PARTS)		
-21	AN393-47	. . PIN	2	
	AN960C10	. . WASHER	4	
		----*----		
-22	1125947	. . PULLEY ASSY (18355)	2	
		(ATTACHING PARTS)		
-23	AN395-61	. . PIN	2	
	AN960C516	. . WASHER	2	
		----*----		
	4155968	. SOCKET ASSY, Lower bomb hoist support (18355)	1	
-24	5128478	. . SOCKET, Lower bomb hoist support (18355)	1	
-25	1128730	. . PIN (18355)	2	
-26	1128731	. . SPRING (18355)	1	
-27	1150403	. . PIN (18355)	2	
	5128556	. BRACKET INSTL, Bomb hoist support (18355)	1	
-28	4128221	. . BRACKET (18355)	2	
		(ATTACHING PARTS)		
	MS20365-428	. . NUT	6	
	AN960-416	. . WASHER	6	
-29	AN4-10A	. . BOLT	6	
		----*----		

FIG. AND INDEX NO.	PART NUMBER	DESCRIPTION 1 2 3 4 5 6 7	UNITS PER ASSY	USABLE ON CODE
91-30	1156779	. . LATCH (18355)	2	
		(ATTACHING PARTS)		
	MS20365-1032	. . NUT	2	
	NAS43HT3-06	. . SPACER	2	
-31	1087510-10-10	. . SCREW (18355)	2	
		----*----		
-32	1156778	. . SPRING (18355)	2	
	AN960D416	. . WASHER	2	
	5125787	. BEAM ASSY, Bomb hoist (18355)	1	
-33	5125784	. . SUPPORT ASSY, RH (18355)	1	
-34	5125785	. . SUPPORT ASSY, LH (18355)	1	
-35	5125782	. . CHANNEL ASSY, RH (18355)	1	
-36	5125783	. . CHANNEL ASSY, LH (18355)	1	
-37	1125947	. . PULLEY ASSY (18355)	4	
		(ATTACHING PARTS)		
-38	1127618	. . PIN (18355)	8	
-39	AN5-33A	. . BOLT	4	
	AN960C516	. . WASHER	8	
	MS20365-524	. . NUT	4	
		----*----		
-40	AN393-43	. . PIN	2	
-41	2126687	. . PIN (18355)	1	
-42	125522	. . PIN (18355)	3	
-43	2129389	. . STRAP (18355)	1	
-44	1150466	. . SCREW (18355)	1	
	1150465	. . WASHER (18355)	1	
	5127966	. BOMB HOIST INSTL, Pulley bracket sta 123 (18355)	NP	
	5127967	. . BRACKET ASSY, Bomb hoist pulley (18355)	1	
-45	4127542	. . . BRACKET (18355)	1	
-46	1125947	. . . PULLEY (18355)	1	
		(ATTACHING PARTS)		
	AN310-5	. . . NUT	1	
	AN970-5	. . . WASHER	1	
	AN960-516	. . . WASHER	1	
-47	AN5-21	. . . BOLT	1	
		----*----		
-48	1127684	. . . GUARD (18355)	1	
-49	1127686	. . . PIN (18355)	1	
-50	1127685	. . . SPRING (18355)	1	
-51	1125952	. . . PIN (18355)	2	
-52	1150403	. . . PIN (18355)	1	
-53	1127683	. . . SPRING (18355)	2	
	5125686	. SUPPORT ASSY, Wing bomb hoist attaching outboard (18355)	1	
	5125683	. SUPPORT ASSY, Wing bomb hoist attaching inboard (18355)	1	
-54	5125684	. . SUPPORT ASSY (18355) (used on 5125686)	1	
-55	5125685	. . SUPPORT ASSY (18355) (used on 5125683)	1	
-56	1125953	. . SPRING (18355)	2	
-57	1125950	. . PLUNGER (18355)	2	
-58	1125952	. . PIN (18355)	2	
-59	1125947	. . PULLEY (18355) (used on 5125683)	1	
		(ATTACHING PARTS)		
	AN310-5	. . NUT	1	
	AN960D516	. . WASHER	1	
-60	AN5-15	. . BOLT	1	
		----*----		

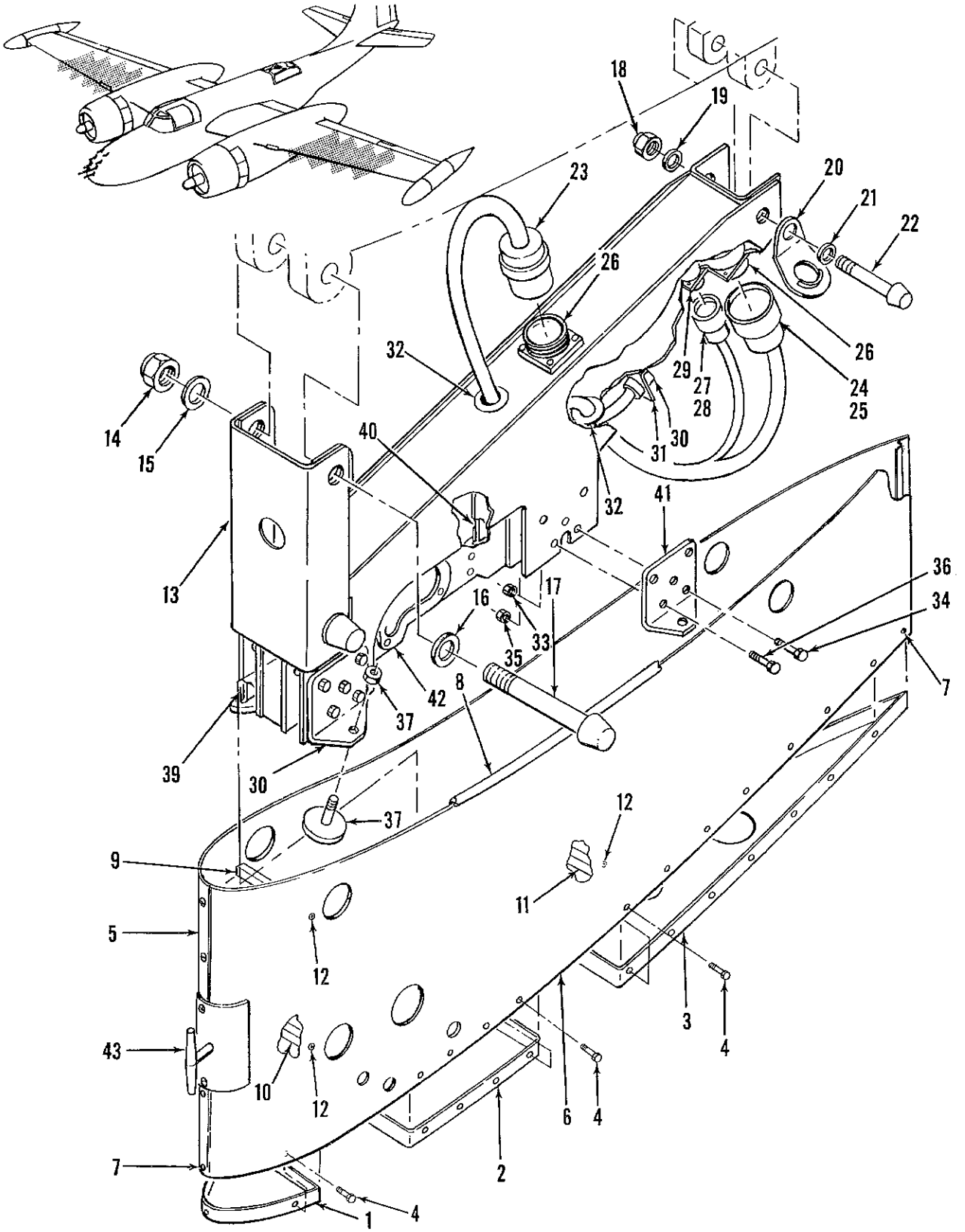

Figure 92. External Wing Stores Pylon Installation

FIG. AND INDEX NO.	PART NUMBER	DESCRIPTION 1 2 3 4 5 6 7	UNITS PER ASSY	USABLE ON CODE
92-	26-1010	PYLON INSTL, External wing stores (for NHA see fig. 2)	REF	
	26-1013-15L	. FAIRING ASSY, Wing stores pylon (used on pylon 1 only)	1	
	26-1013-14L	. FAIRING ASSY, Wing stores pylon (used on pylon 2 only)	1	
	26-1013-13L	. FAIRING ASSY, Wing stores pylon (used on pylon 3 only)	1	
	26-1013-12L	. FAIRING ASSY, Wing stores pylon (used on pylon 4 only)	1	
	26-1013-12R	. FAIRING ASSY, Wing stores pylon (used on pylon 5 only)	1	
	26-1013-13R	. FAIRING ASSY, Wing stores pylon (used on pylon 6 only)	1	
	26-1013-14R	. FAIRING ASSY, Wing stores pylon (used on pylon 7 only)	1	
	26-1013-15R	. FAIRING ASSY, Wing stores pylon (used on pylon 8 only)	1	
-1	26-1013-33	. . RIB, Forward (used with large stores only)	1	
	26-1013-35	. . RIB, Forward (used with small stores only)	1	
-2	26-1013-39	. . RIB, Center (used with large stores only)	1	
	26-1013-37	. . RIB, Center (used with small stores only)	1	
-3	26-1013-41	. . RIB, Aft (used with large stores only)	1	
	26-1013-43	. . RIB, Aft (used with small stores only)	1	
		(ATTACHING PARTS)		
-4	NAS220-8	. . SCREW	30	
		----*----		
-5	26-1013-19	. . PANEL ASSY, Fairing (used on 26-1013-12L and 26-1013-12R)	1	
	26-1013-23	. . PANEL ASSY, Fairing (used on 26-1013-13L and 26-1013-13R)	1	
	26-1013-27	. . PANEL ASSY, Fairing (used on 26-1013-14L and 26-1013-14R)	1	
	26-1013-31	. . PANEL ASSY, Fairing (used on 26-1013-15L and 26-1013-15R)	1	
-6	26-1013-17	. . PANEL ASSY, Fairing (used on 26-1013-12L and 26-1013-12R)	1	
	26-1013-21	. . PANEL ASSY, Fairing (used on 26-1013-13L and 26-1013-13R)	1	
	26-1013-25	. . PANEL ASSY, Fairing (used on 26-1013-14L and 26-1013-14R)	1	
	26-1013-29	. . PANEL ASSY, Fairing (used on 26-1013-15L and 26-1013-15R)	1	
		(ATTACHING PARTS)		
-7	AN526-428-R8	. . SCREW	8	
		----*----		
-8	0-38-39	. . . SEAL (92108)	1	
-9	26-1013-45	. . SUPPORT ASSY, Fairing	1	
-10	26-1013-47	. . SUPPORT ASSY, Fairing (used on 26-1013-12L and -12R)	1	
	26-1013-45	. . SUPPORT ASSY, Fairing (used on 26-1013-13L, -13R, -14L, -14R, -15L, and -15R	1	
-11	26-1013-49	. . SUPPORT ASSY, Fairing	1	
		(ATTACHING PARTS)		
-12	AN526-428R8	. . SCREW	6	
		----*----		
-13	26-1010-2	. MOUNT ASSY, Vertical	8	
		(ATTACHING PARTS)		
-14	MS20365-1414C	. NUT	16	
-15	MS20002-14	. WASHER	AR	
-16	MS20002C14	. WASHER	16	
-17	MS20014-76	. BOLT	16	
		----*----		
	26-1010-1	. MOUNT ASSY, Diagonal	8	
		(ATTACHING PARTS)		
-18	MS20365-1018C	. NUT	8	
-19	MS20002-10	. WASHER	AR	
-20	26-1165-1	. TIE-DOWN BRACKET (used on pylon 1 and 8 only)	2	
-21	MS20002C10	. WASHER	8	
-22	MS20010-60	. BOLT	6	
	MS20010-64	. BOLT (used on pylon 1 and 8 only)	2	
		----*----		
-23	MS3106E28-20P	. . CONNECTOR	1	
-24	MS3107B28-9S	. . CONNECTOR	1	
-25	MS3057-16	. . ADAPTER	1	
-26	26-1010-28	. . RECEPTACLE, Dummy (altered from CA2182-10) (71468)	2	
		(ATTACHING PARTS)		
	AN500A6-8	. . SCREW	8	
		----*----		
-27	MS3107B14-5S	. . CONNECTOR	1	
-28	MS3057-6	. . ADAPTER	1	
-29	26-1010-29	. . RECEPTACLE, Dummy (altered from CA2182-17) (71468)	1	

FIG. AND INDEX NO.	PART NUMBER	DESCRIPTION 1 2 3 4 5 6 7	UNITS PER ASSY	USABLE ON CODE
92-		(ATTACHING PARTS)		
	AN500A4-8	. . SCREW	4	
-30	MS3100E18-1S	. . CONNECTOR	1	
	MS20365-632	. . NUT	4	
	AN960-6	. . WASHER	4	
	AN515-6R8	. . SCREW	4	
		----*----		
-31	26-1010-30	. . BRACKET, Connector	1	
		(ATTACHING PARTS)		
	AN500A4-8	. . SCREW	4	
		----*----		
-32	G51HD	. . GROMMET (03296)	3	
	26-1050-1	. BRACE ASSY, Sway	8	
	26-1051-1	. BRACE ASSY, Sway (used on pylon 4 and 5 only) (for large stores only)	2	
	26-1050-2	. BRACE ASSY, Sway	8	
	26-1051-2	. BRACE ASSY, Sway (used on pylon 4 and 5 only) (for large stores only)	2	
	26-1050-3	. BRACE ASSY, Sway	8	
	26-1051-3	. BRACE ASSY, Sway (used on pylon 4 and 5 only) (for large stores only)	2	
	26-1050-2	. BRACE ASSY, Sway	8	
	26-1051-4	. BRACE ASSY, Sway (used on pylon 4 and 5 only) (for large stores only)	2	
		(ATTACHING PARTS)		
-33	MS20365-524	. NUT	32	
-34	AN5-6	. BOLT	32	
-35	MS20365-624	. NUT	128	
-36	AN6-6	. BOLT	128	
		----*----		
-37	26-1011	. . SCREW ASSY, Sway brace	1	
-38	26-1050-5	. . BRACE, Sway (used on 26-1050-1)	1	
	26-1051-5	. . BRACE, Sway (used on 26-1051-1)	1	
-39	26-1050-6	. . BRACE, Sway (used on 26-1050-2)	1	
	26-1051-6	. . BRACE, Sway (used on 26-1051-2)	1	
-40	26-1050-7	. . BRACE, Sway (used on 26-1050-3)	1	
	26-1051-7	. . BRACE, Sway (used on 26-1051-3)	1	
-41	26-1050-6	. . BRACE, Sway (used on 26-1050-2)	1	
	26-1051-8	. . BRACE, Sway (used on 26-1051-4)	1	
-42	MA4A	. BOMB RACK (GFE) (for details see T.O. 11B29-3-8-4)	8	
-43	26-1017	. EXTENSION CABLE, Manual bomb cocking	8	

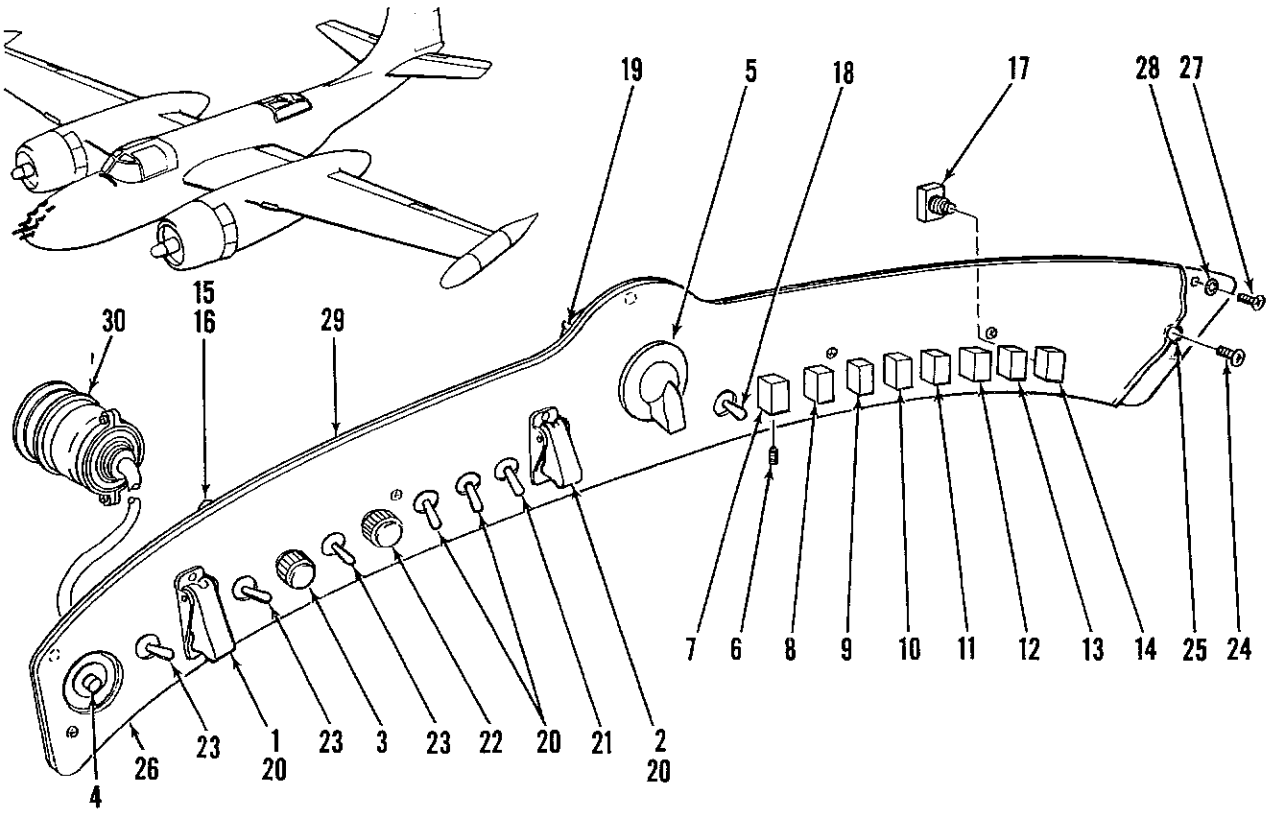

Figure 93. Armament Control Panel Assembly

FIG. AND INDEX NO.	PART NUMBER	DESCRIPTION 1 2 3 4 5 6 7	UNITS PER ASSY	USABLE ON CODE
93-	26-2604-400	PANEL ASSY, Armament control (for NHA see fig. 90)	REF	
-1	26-2667-13	. GUARD, Switch, engraved (altered from MS25224-1)	1	
-2	26-2667-15	. GUARD, Switch, engraved (altered from MS25244-1)	1	
-3	MS25041-2	. LIGHT, Indicator	1	
-4	C100E3RSHR	. SWITCH (99707)	1	
-5	MS25170P2A	. KNOB	1	
-6	AN565D632H3A	. SETSCREW	8	
-7	26-2663-1	. KNOB, Safety, armament panel	1	
-8	26-2663-3	. KNOB, Safety, armament panel	1	
-9	26-2663-5	. KNOB, Safety, armament panel	1	
-10	26-2663-7	. KNOB, Safety, armament panel	1	
-11	26-2663-9	. KNOB, Safety, armament panel	1	
-12	26-2663-11	. KNOB, Safety, armament panel	1	
-13	26-2663-13	. KNOB, Safety, armament panel	1	
-14	26-2663-15	. KNOB, Safety, armament panel	1	
-15	MS25237-327	. LAMP	8	
-16	FSN855S1-9U	. LIGHT, Indicator (08717)	8	
-17	MS35058-21	. SWITCH	8	
-18	MS35058-21	. SWITCH	1	
-19	MS25002-3	. SWITCH	1	
-20	MS35058-22	. SWITCH	4	
-21	MS35059-23	. SWITCH	1	
-22	MS25041-3	. LIGHT, Indicator	1	
-23	MS35059-21	. SWITCH	3	
-24	AN500AD6-6	. SCREW	5	
-25	AN6227B1	. PACKING, Preformed	1	
-26	26-2604-1	. PANEL, Engraved, armament control	1	
-27	NAS220-8	. SCREW	7	
-28	AN960PD8L	. WASHER	7	
-29	26-2604-3	. PANEL, Armament control	1	
	EL-26-20	. WIRING HARNESS	1	
-30	RLK57-22C1 1-2POS	. . CONNECTOR, Electrical, receptacle (71468)	1	

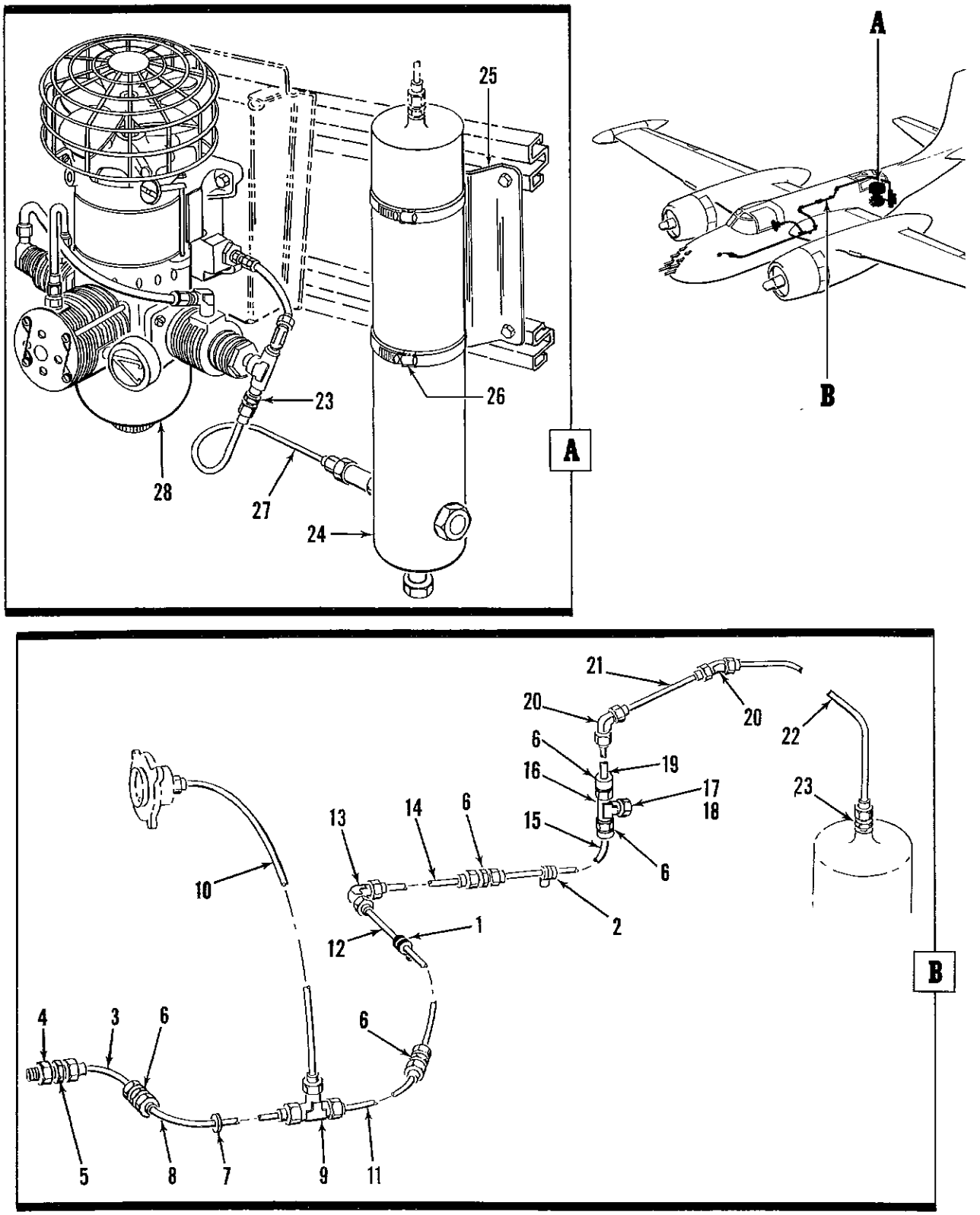

Figure 94. Fuselage Pneumatic Gun Charging Equipment Installation

FIG. AND INDEX NO.	PART NUMBER	DESCRIPTION 1 2 3 4 5 6 7	UNITS PER ASSY	USABLE ON CODE
94-	26-11003	GUN CHARGING EQUIPMENT INSTL, Fuselage pneumatic (for NHA see fig. 90)	REF	
-1	A2981-4	. CLAMP (78553)	5	
-2	A6246-8Z3	. CLIP (78553)	10	
		(ATTACHING PARTS)		
	AN530-8-8	. SCREW	15	
		----*----		
-3	26-11003-8	. TUBE ASSY, Metal	1	
	AN818-4D	. . NUT	2	
	MS20819-4D	. . SLEEVE	2	
-4	AN832-4D	. UNION	1	
-5	AN924-4D	. NUT	1	
-6	AN815-4D	. UNION	6	
-7	S-2210350-5-12	. GROMMET (18355)	1	
-8	4209771-524	. TUBE ASSY, Metal (18355)	1	
	AN818-4D	. . NUT	2	
	MS20819-4D	. . SLEEVE	2	
-9	AN824-4D	. TEE	1	
-10	26-11003-7	. TUBE ASSY, Metal	1	
-11	26-11003-6	. TUBE ASSY, Metal	1	
-12	4209771-508	. TUBE ASSY, Metal (18355)	1	
	AN818-4D	. . NUT	6	
	MS20819-4D	. . SLEEVE	6	
-13	AN833-4D	. ELBOW	1	
-14	4209771-518	. TUBE ASSY, Metal (18355)	1	
-15	26-11003-5	. TUBE ASSY, Metal	1	
	AN818-4D	. . NUT	4	
	MS20819-4D	. . SLEEVE	4	
-16	AN926-4D	. TEE	1	
-17	AN814-4D	. PLUG	1	
-18	AN902-4	. GASKET	1	
-19	26-11003-3	. TUBE ASSY, Metal	1	
	AN818-4D	. . NUT	2	
	MS20819-4D	. . SLEEVE	2	
-20	AN837-4D	. ELBOW	2	
-21	26-11003-2	. TUBE ASSY, Metal	1	
-22	26-11003-9	. TUBE ASSY, Metal	1	
	AN818-4D	. . NUT	4	
	MS20819-4D	. . SLEEVE	4	
-23	AN919-6D	. REDUCER	2	
-24	31G100	. TANK ASSY (14650) (For details see T.O. 9P2-3-11-4)	1	
-25	4278124	. BRACKET (18355)	1	
		(ATTACHING PARTS)		
	MS20365-1032	. NUT	4	
	AN960-10	. WASHER	8	
	AN3-4A	. BOLT	4	
		----*----		
-26	AN748-91	. CLAMP	2	
-27	26-11003-4	. TUBE ASSY, Metal	1	
	AN818-4D	. . NUT	2	
	MS20819-4D	. . SLEEVE	2	
-28	32R400	. COMPRESSOR ASSY (78385) (For details see T.O. 9P4-3-4-4)	1	
		(ATTACHING PARTS)		
	AN4-7A	. BOLT	4	
	AN960-416	. WASHER	4	
		----*----		

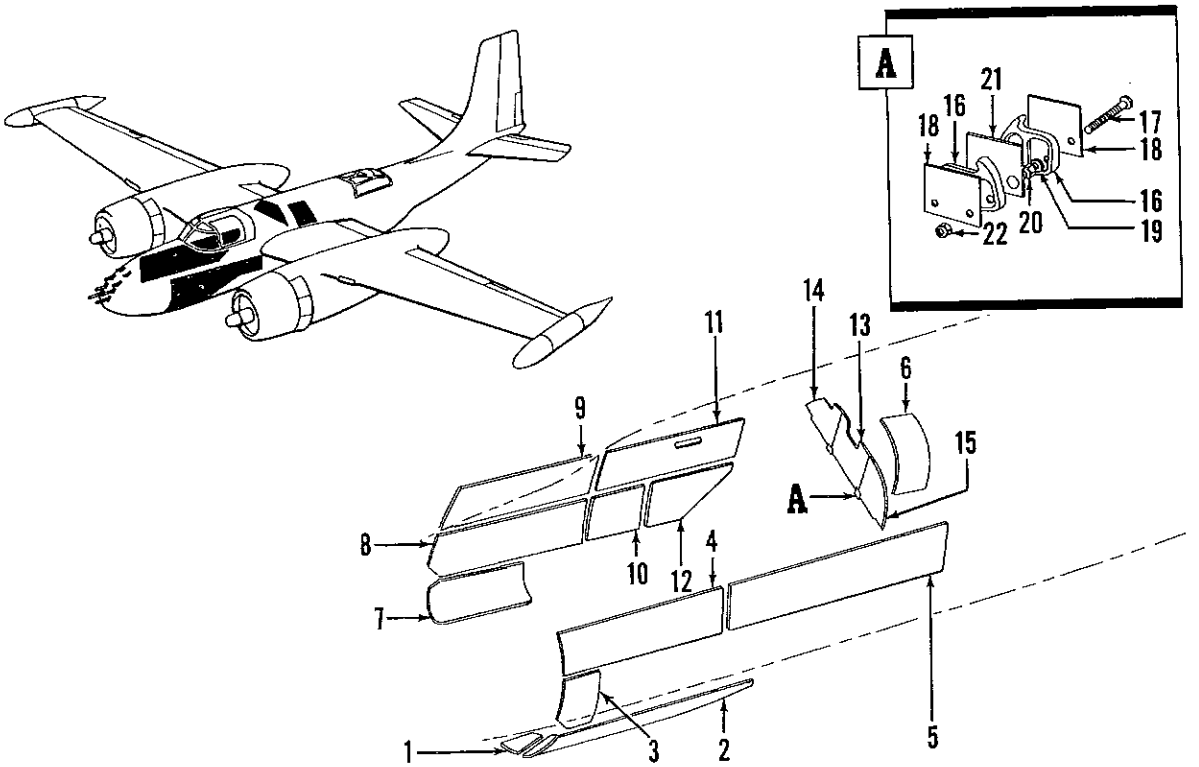

Figure 95. B26K Fuselage Armor Installation

FIG. AND INDEX NO.	PART NUMBER	DESCRIPTION 1 2 3 4 5 6 7	UNITS PER ASSY	USABLE ON CODE
95-	26-11002	ARMOR INSTL, B26K fuselage (altered from 5157317 (18355)) (for NHA see fig. 2)	REF	
	5194542	. ARMOR PLATING INSTL, Fuselage outside (18355)	1	
	5194566	. . PLATE ASSY, Fuselage armor sta 0 to 49 lower LH (18355)	1	
-1	5194566-4	. . . PLATE, Fuselage armor sta 0 to 49 lower LH (18355)	1	
-2	5194566-2	. . . PLATE, Fuselage armor sta 0 to 49 lower LH (18355)	1	
-3	4193485	. . PLATE, Fuselage armor longeron 10 to 13 forward outer LH (18355)	1	
-4	5194534	. . PLATE, Armor cockpit stiffener to longeron to forward LH (18355)	1	
-5	5194535	. . PLATE, Armor cockpit stiffener to longeron to aft LH (18355)	1	
-6	5194558	. . PLATE, Cockpit enclosure armor (18355)	1	
-7	5194630	. . PLATE, Armor sta 0 to 29 lower side RH (18355)	1	
-8	5194549	. . PLATE, Armor longeron 11 to 13 forward HR (18355)	1	
-9	5194536	. . PLATE, Armor cockpit stiffener to longeron 11 forward RH (18355)	1	
-10	4195233	. . PLATE, Breech pin access door armor RH (18355)	1	
-11	5194537	. . PLATE, Armor cockpit stiffener to longeron 11 aft RH (18355)	1	
-12	5194558	. . PLATE, Armor longeron 11 to 13 aft RH (18355)	1	
		(ATTACHING PARTS)		
	A1778M1	. . NUT (78553)	AR	
	MA20365-428	. . NUT	AR	
	1114189-28-12	. . SCREW (18355)	AR	
	1114189-28-14	. . SCREW (18355)	AR	
	AN509-416R39	. . SCREW	AR	
		----*----		

FIG. AND INDEX NO.	PART NUMBER	DESCRIPTION 1 2 3 4 5 6 7	UNITS PER ASSY	USABLE ON CODE
95-	5193195	. ARMOR PLATE INSTL, Fuselage sta 123 upper (18355)	1	
-13	4193452	. . PLATE, Fuselage armor sta 123 upper center (18355)	1	
-14	4207537	. . PLATE, Fuselage armor sta 123 upper RH (18355)	1	
-15	4193453	. . PLATE, Fuselage armor sta 123 upper LH (18355)	1	
-16	1193846	. . RETAINER (18355)	4	
-17	176000-4S26ND116	. . BOLT (18355)	4	
-18	5193195-8	. . PLATE (18355)	4	
-19	143908-009D016-093	. . WASHER (18355)	4	
-20	AN316-4R	. . NUT	4	
-21	5193195-10	. . PLATE (18355)	2	
-22	MS20365-428	. . NUT	4	

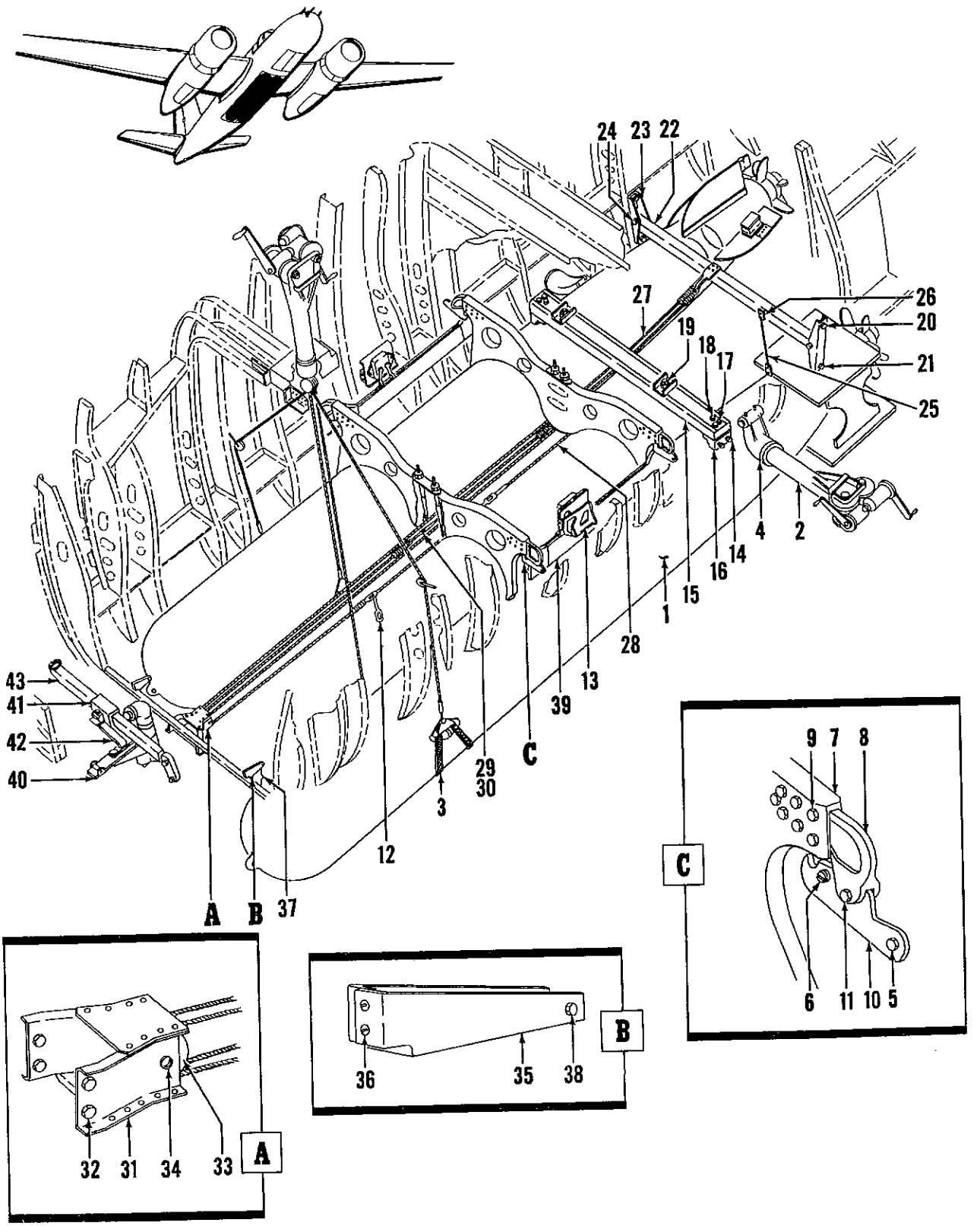

Figure 96. Torpedo Alternate Provision Installation

FIG. AND INDEX NO.	PART NUMBER	DESCRIPTION 1 2 3 4 5 6 7	UNITS PER ASSY	USABLE ON CODE
96-	5207115	PROVISION INSTL, Torpedo alternate (18355)	1	
	5207119	KIT ASSY, Torpedo alternate (18355) (for details see fig. 97)	1	
-1	1B0275196	. TORPEDO, MKXIII modulator with type II stabilizer (GFE)	2	
-2	5122277	. HOIST ASSY, Bomb (18355) (for details see fig. 91)	REF	
-3	42G2343-5	. SLING ASSY, Bomb hoist type A-1 (USAF)	2	
-4	4155970	. SOCKET ASSY, Torpedo hoist support (18355)	1	
	5159582	. BEAM ASSY, Torpedo complete cross (18355)	2	
		(ATTACHING PARTS)		
	AN310-4	. NUT	2	
	AN960D416	. WASHER	2	
-5	AN4-13	. BOLT	2	
	AN310-5	. NUT	2	
	AN960D516	. WASHER	2	
-6	2035884-524-107	. BOLT (18355)	2	
		----*----		
-7	5152059	. . BEAM ASSY, Torpedo cross (18355)	1	
-8	4151239	. . FITTING, Torpedo beam end (18355)	2	
		(ATTACHING PARTS)		
	MS20365-524	. . NUT	14	
	AN960D10	. . WASHER	14	
-9	AN5-13A	. . BOLT	14	
		----*----		
-10	2159653	. . FITTING, Torpedo sling support LH (18355)	1	
	2159654	. . FITTING, Torpedo sling support RH (18355)	1	
		(ATTACHING PARTS)		
	AN310-5	. . NUT	1	
	AN960D10	. . WASHER	1	
	1190786	. . BUSHING (18355)	1	
-11	AN5-13A	. . BOLT	1	
		----*----		
-12	4191401	. SLING ASSY, Torpedo release (18355)	4	
		(ATTACHING PARTS)		
	AN315-10R	. NUT	4	
	AN316-10R	. NUT	4	
		----*----		
-13	5205113	. PANEL ASSY, Torpedo release complete LH (18355) (for details see fig.)	1	
	5205113-1	. PANEL ASSY, Torpedo release complete RH (18355) (for details see fig.)	1	
	5150160	. BEAM ASSY, Torpedo stop bolt (18355)	1	
		(ATTACHING PARTS)		
	MS20365-524	. NUT	4	
	1026614-5-120	. SPACER (18355)	4	
	AN960D516	. WASHER	8	
	AN960-516	. WASHER	4	
-14	AN5-23A	. BOLT	4	
		----*----		
-15	5150159	. . BEAM ASSY, Torpedo stop bolt (18355)	1	
-16	4129516	. . FITTING (18355)	2	
		(ATTACHING PARTS)		
	MS20365-428	. . NUT	4	
	AN960D416	. . WASHER	4	
-17	AN4-6A	. . BOLT	4	
	MS20365-524	. . NUT	2	
	AN960D516	. . WASHER	2	
-18	AN5-6A	. . BOLT	2	
		----*----		
	AN310-12	. . NUT	2	
	2033900-14D049-123	. . SPACER (18355)	2	
	AN960D1216	. . WASHER	2	
	143908-025R102-062	. . WASHER (18355)	4	
-19	2129399	. . BOLT (18355)	2	
	3157873	. BEAM ASSY, Torpedo starting lanyard (18355)	1	
		(ATTACHING PARTS)		
	MS20365-1032	. NUT	6	
	AN960D10	. WASHER	6	

FIG. AND INDEX NO.	PART NUMBER	DESCRIPTION 1 2 3 4 5 6 7	UNITS PER ASSY	USABLE ON CODE
96-20	AN3-7A	. BOLT	4	
-21	AN3-6A	. BOLT	2	
		----*----		
-22	3157873-6	. . BEAM ASSY, Torpedo starting lanyard (18355)	1	
-23	2159696	. . SUPPORT (18355)	2	
		(ATTACHING PARTS)		
	AN310-4	. . NUT	2	
	AN960D416	. . WASHER	2	
-24	AN4-26	. . BOLT	2	
		----*----		
-25	2074407-16-14-1100	. . CABLE ASSY (18355)	2	
		(ATTACHING PARTS)		
	MS20365-1032	. . NUT	4	
	AN960D10	. . WASHER	4	
-26	AN3-5A	. . BOLT	4	
		----*----		
-27	2190926	. CORD ASSY (18355)	2	
-28	2074408-8-8-2800	. CABLE ASSY (18355)	2	
-29	1192335	. LOOP (18355)	8	
	AN310-3	. NUT	8	
-30	AN3-6A	. BOLT	8	
-31	4152675	. BRACKET ASSY, Torpedo sling retrieving (18355)	1	
		(ATTACHING PARTS)		
	MS20365-1032	. NUT	4	
	AN960-10L	. WASHER	4	
-32	AN3-4A	. BOLT	4	
		----*----		
-33	139081-1	. ROLLER (18355)	2	
		(ATTACHING PARTS)		
	AN320-4	. NUT	2	
	AN960-416L	. WASHER	2	
	1026614-4-106	. SPACER (18355)	2	
-34	AN24-26	. BOLT	2	
		----*----		
-35	2202449	. BRACKET, Torpedo impeller lockwire support (18355)	2	
		(ATTACHING PARTS)		
	MS20365-832	. NUT	4	
	AN960D8L	. WASHER	4	
-36	AN515-8-8	. SCREW	4	
		----*----		
-37	1195858	. LANYARD ASSY, Torpedo impeller arming (18355)	2	
		(ATTACHING PARTS)		
	AN320-3	. NUT	2	
	AN960D10	. WASHER	2	
-38	AN3-12	. BOLT	2	
		----*----		
-39	41E4555	. SHACKLE, Type D6 bomb (GFE) (for details see	2	
		T.O. 11B40-3-2-4)		
	5195511	. DIRECTOR ASSY, Torpedo complete (18355)	1	
-40	R24789	. . DIRECTOR, Type B2 (GFE)	1	
-41	NO NUMBER	. . SLIDE ASSY, Director type B-2 (GFE)	1	
-42	2195127	. . SPACER ASSY, Torpedo director (18355)	1	
-43	3195628	. SUPPORT ASSY, Torpedo director sight horizon bar (18355)	1	